ELIET®

USER MANUAL

Minor 4S



In this manual you will find information on the proper operation and maintenance of the machine.
Read it carefully and keep it in a safe place.



Please keep your **purchase invoice** or proof of payment with this manual.



Register your online purchase at **www.eliet.eu**



Caution: When commissioning a new machine, it is imperative to check that all blade bolts are properly tightened before the end of the **first 5 hours of operation.** Otherwise, one or more blades may come off. This can cause serious damage to your new machine and can lead to serious injury or even death to the operator. ELIET accepts no liability for the consequences of such negligence, which also means that you lose any right to the warranty.

© ELIET
Copyright 2026 ELIET. All rights reserved. All texts, drawings, illustrations, diagrams, graphs, etc., included in this ELIET manual are protected by copyright but also by other intellectual property rights. None of this information may be copied for commercial or distribution purposes and/or modified or transferred (“reposted”) for other purposes. Content whose copyrights belong exclusively to their respective owners and have been reproduced in certain places in this ELIET manual.

1. Introduction



1.1 Read the instructions carefully

ELIET machines are designed to operate safely and reliably as long as they are used in accordance with the instructions. You should read these operating instructions carefully before using the machine. Failure to do so may result in personal injury or property damage.

1.2 Identification data – ELIET MINOR 4S

Write down the identification data of your machine in the boxed spaces:

Article reference:	MA 002
Serial Number:	
Year of construction:	20

2. Warranty



2.1 Warranty Card

The customer wishing to invoke the warranty must register his machine online:
www.elietmachines.com - Customer Support - Register. If you do not have an Internet connection, you can return your handwritten registration card to :
ELIET EUROPE NV, Diesveldstraat 2, B – 8553 Otegem (Belgium)
Tel. +32 (0)56 77 70 88 - Fax +32 (0)56 77 52 13



Any technical problems or breakages resulting from improper maintenance of the machine void any warranty claims. Chapter 11 provides a summary of service intervals and indicates for which service an authorized dealer should be consulted.

Read the warranty conditions on the attached warranty card.

3. Welcome



Welcome to the ELIET customer community.

We thank you for having shown your trust in us by purchasing an ELIET machine . We are convinced that you have just bought the best machine ever. The lifespan of your ELIET machine depends on how you treat it. By following the instructions and advice in this manual, you can be sure that your ELIET machine will serve you very well for a very long time.

We strongly recommend that you read this instruction manual carefully. This will help you avoid any missteps that could have serious consequences. It is also in your best interest to read the chapter on safety instructions carefully. Even if you are familiar with this type of machine, it is strongly recommended that you read this instruction manual carefully.

As ELIET is constantly improving its machines and equipment, we reserve the right to make some slight changes to the content of the delivery, both in terms of its configuration and equipment as well as in terms of the technology used. The descriptions and technical specifications in this instruction manual are in force at the time of its publication. Some pictures, or even descriptions, may not be about the type of machine you bought but may relate to another version. Accordingly, we ask you to be understanding that we do not accept any responsibility for the texts and illustrations in this instruction notice. If you still have any questions after reading this manual, please do not hesitate to contact your ELIET dealer.

Find the authorized ELIET distributor in your region on **www.eliet.eu.**

ELIET AT YOUR SERVICE

During office hours, the ELIET helpdesk is always at your disposal to answer your questions:

European Customers: GMT +1: 8-12h & 13-17h
T (+32) 56 77 70 88 - F (+32) (+32) 56 77 52 13

Diesveldstraat 2
B-8553 Otegem
BELGIUM
Service@eliet.eu

U.S. customers: UTC -6: 9-12h & 13-18h
T (+1) 4707626266

2850 North Dug Gap Road
Dalton, GA 30720
USA
info@elietusa.com

4. Table of contents

1. Introduction 3

1.1 Read the instructions carefully 3

1.2 Identification data – ELIET MINOR 4S 3

2. Warranty 3

2.1 Warranty Card 3

3. Welcome 4

4.1 For your information 6

4.2 Caution 6

4.3 Warning 6

5. Main components 7

5.1 Overview 7

5.2 Engines 8

6. Safety instructions 10

6.1 Security Messages 10

6.2 Safety features 12

7. Safety instructions 13

7.2.1 General Safety Instructions 13

7.2.2 Prudent and rational use 13

7.2.3 User Responsibility 15

7.2.4 Personal protective equipment (PPE) 16

7.2.5 Hazardous areas 16

7.2.6 Regular maintenance 17

7.2.7 Electrical Machinery Specific Guidelines 17

8. Distributor's obligations 19

9. Instruction manual 21

9.1 Due diligence 21

9.2 Feeding the tank: 22

9.3 Preparing the work area 23

9.4 Starting the engine 23

9.5 Engine shutdown 25

9.6 Working with the machine 26

9.6.1 Before you start work 26

9.6.2 During work 26

9.6.3 In the event of an engine shutdown 27

10. Machine transport 29

11. Maintenance 31

11.1 General 31

11.2 Maintenance scheme 32

11.2.1 Lubricants 32

11.2.2 Private maintenance 32

11.2.3 Periodic maintenance schedule 33
11.3 Clean the machine 34
11.3.1 The importance of cleaning 34
11.3.2 What does cleaning involve? 35
11.4 Routine check-ups before each work session 36
11.4.1 Visual inspection 36
11.4.2 Engine Oil Level Check 36
11.4.3 Cleaning the air filter 37
11.4.4 Sharpen the blades 37
11.4.5 Belt tension control 40
11.5 Maintenance after 20 hours of operation 41
11.5.1 Engine Oil Replacement 41
11.5.2 Checking or replacing the spark plug 41
11.5.3 Air Filter Replacement 42
11.5.4 General lubrication 42
11.5.5 Adjusting the belt tension 43
11.5.6 Turning and replacing the shredder blades 46
11.5.7 How to turn blades 48
11.5.8 Steps to Replace Blades 50
12. Machine Storage 51
13. Technical sheet 52
14. EC Declaration of Conformity 53
15. Annexes: 54
15.1 Assemble the machine 54
15.2 Assemble/orientation of the discharge chute 55
15.3 List of tightening torques 56
15.4 Risk analysis 57
15.5 Warranty conditions 58
15.5.1 Procedure 59
15.5.2 In case of damage during transport 59

5. Safety Pictograms

ELIET is not able to predict every situation that may constitute a risk or danger. The warnings in this manual as well as the stickers affixed to the machine are therefore not exhaustive. Although minimal, there is still a risk. If you as a user apply a procedure, action or technique that is not explicitly recommended by ELIET, please be careful not to endanger third parties.







The symbols contained in this instruction manual (“For your information”, “Caution”, “Warning”) provide you with further details and indicate potential hazards.

5.1 For your information



Info: This symbol is used to draw your attention to information and/or special manipulations or indicates that more information on the subject is available elsewhere.

5.2 Caution



Caution: This symbol explains how to avoid mishandling. This will prevent any manipulation that could cause bodily injury or property damage.

5.3 Warning



Warning: This symbol draws your attention to an imminent danger that you must take into account in certain circumstances. So be vigilant to guarantee your safety.

These security messages are limited to warning the user; they do not eliminate the risk in any way.

6. Main components



To fully understand the content of this instruction leaflet, it is important to familiarize yourself with the terminology used in the explanations. This chapter reviews different pieces by identifying them by name. It is highly recommended that you study the machine beforehand in order to understand the explanations given in this owner's manual.

6.1 Overview

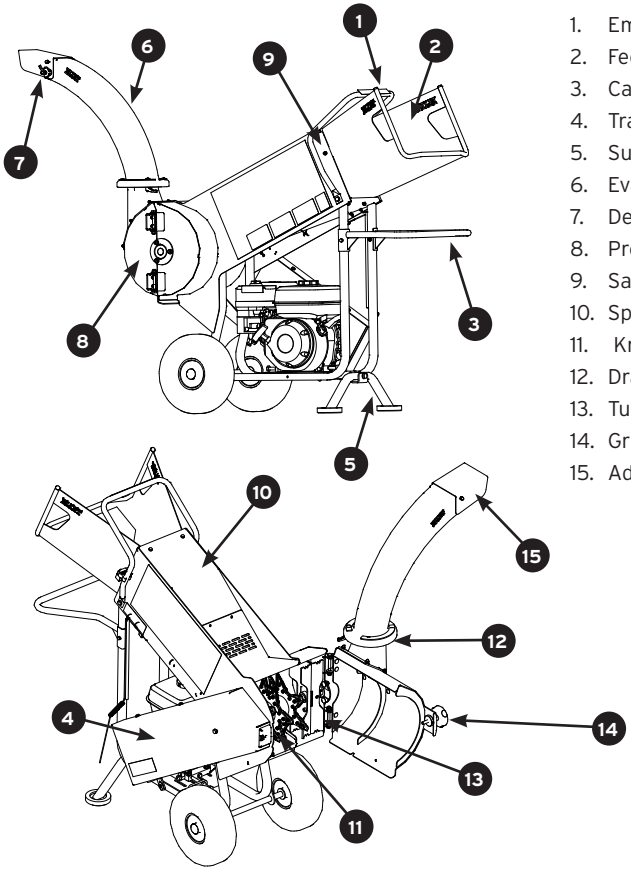

1. Emergency stop lever
2. Feeding Funnel
3. Carrying handle
4. Transmission housing
5. Support Foot
6. Evacuation chute
7. Deflector flap wheel
8. Propeller housing
9. Safety switches (2)
10. Spray deflectors
11. Knife shaft
12. Drain chute orientation wheel
13. Turbine Propeller
14. Grinding chamber access wheel
15. Adjustable deflector valve

6.2 Engines

6 HP HONDA GP200

6,5 HP HONDA GX200

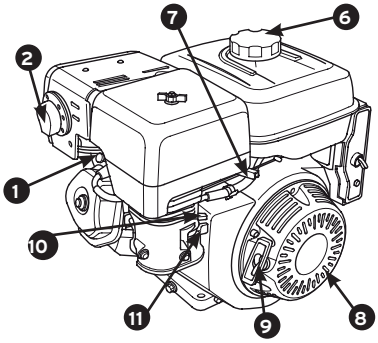

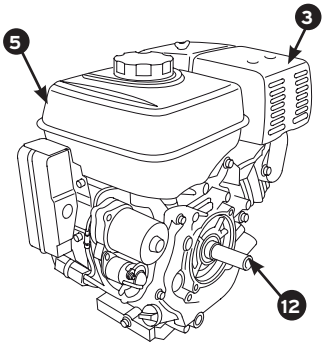

6,5 HP VANGUARD 200

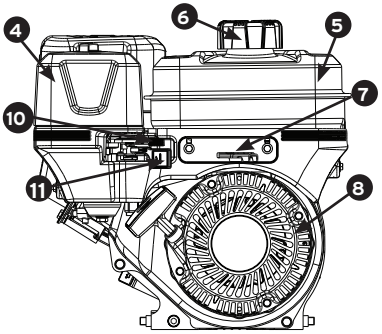

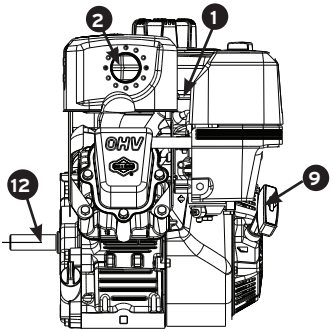

1. Spark plug
2. Exhaust outlet
3. Exhaust silencer
4. Air Filter
5. Gas tank
6. Fuel Tank Cap
7. Engine speed control
8. Starter Launcher
9. Launcher Handle
10. Strangler (choke)
11. Fuel inlet valve
12. Motor shaft
13. Oil level gauge
14. Oil drain plug

ELECTRIC MOTOR POWER 380 V

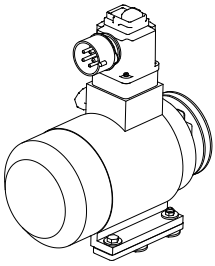



Info: When the instruction manual speaks of "right, left, forward and backward", it always adopts the point of view of the operator on the feed side of the machine.



Info: Your ELIET dealer is there to advise you and maintain your machine so that it always offers optimal performance. You can also contact the latter for your parts and lubricants needs. These parts are designed with the same craftsmanship and precision as the original parts.



Caution: For your own safety, ELIET recommends that you only use original parts.

7. Safety instructions





7.1 Security Messages

Safety messages are displayed in the form of stickers or embossed illustrations in clearly visible places on the machine. Pay attention to the pictograms and warning messages on the Index.

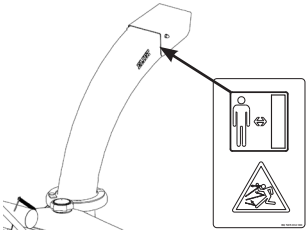

This sticker informs the user that third parties present must maintain a minimum distance from the machine (10 m).

This sticker is affixed to the deflector flap and warns of the risk of injury that may occur if you stand in the ejection area of the chipper while the machine is operating.
(Part number: BQ 505 014 100)

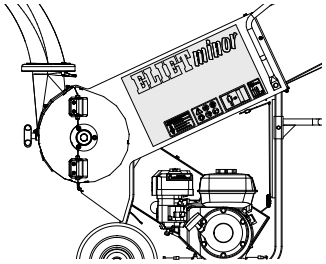

This sticker is affixed to the left side of the machine. It summarizes the general safety instructions using icons:

1. You must read and understand the instruction manual before operating the machine.
2. Remember to wear appropriate safety clothing while using the machine (gloves, goggles, hearing protection).
3. Using or maintaining the equipment presents a risk of hand cuts. Be cautious and take precautions.
4. Risk of flying debris at any time.

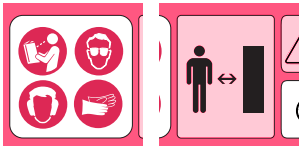

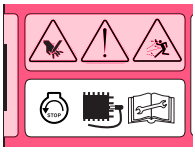

This sticker is attached to the machine at engine height. It warns the operator to stop the engine and remove the spark plug cap before performing any maintenance on the machine.
(Part number: BQ 501 030 030)

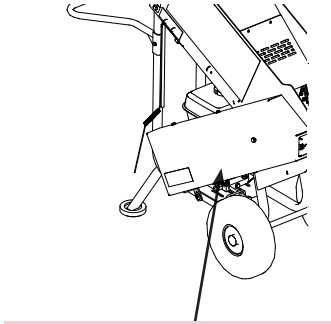

This sticker, affixed to the V-belt guard, indicates that a belt or chain is hidden underneath. The pictogram warns of the risk of pinching/crushing and instructs to keep all body parts away from this area. It is strictly forbidden to operate the machine without the safety guard.

Before any intervention, please read the maintenance manual. Wait at least one minute to ensure that all moving parts have completely stopped before performing maintenance.



The sticker affixed to the V-belt guard near the engine exhaust indicates a burn hazard in this area.
(Part number: BQ 505 010 810)

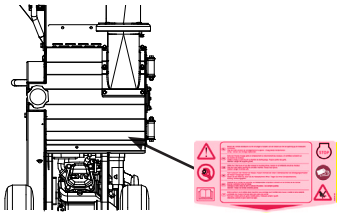

This sticker, affixed to the hopper, reminds the user to check the tightening of the bolts securing the knives to the shaft 5 hours after any intervention and during the commissioning of a new machine (knife change or rotation).

It is mandatory to wear gloves, read the maintenance manual, use the correct tools, and ensure that the engine is turned off before any maintenance.
(Part number: BQ 505 010 420)



This sticker is affixed inside the feed opening. It explicitly warns of the risk of hand injuries inherent to wood chipping. It reminds the user how to work safely with the chipper.

It is strictly forbidden to put your hands beyond the anti-projection deflector!
(Part number: BQ 505 010 110)

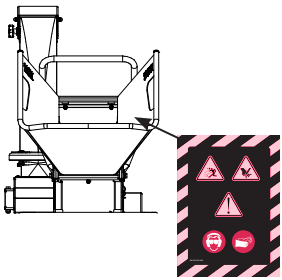

This sticker is affixed to the protective shield. The risk of cuts and injuries caused by flying chips is real when the operator lifts the protective shield. This very explicit sticker draws attention to these dangers.

Remember to wear appropriate safety clothing while using the machine (gloves, goggles, hearing protection).
(Part number: BQ 505 010 840)

7.2 Safety features

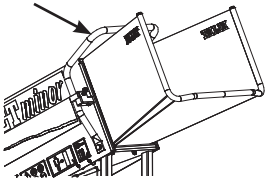

Emergency stop lever:

This lever is located around the inlet hopper. Pushing this lever forward will stop the motor from running.

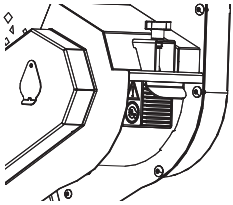

Access door to the grinding chamber:

This access door protects the user from injury from blades when the engine is running. The motor switches off automatically as soon as the clamping wheel is unscrewed to open the access door to the grinding chamber.

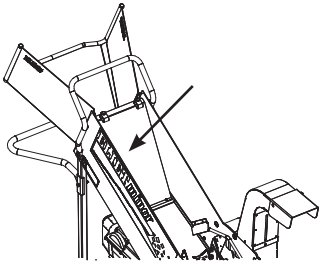

Anti-projection deflector:

The steel sheet mounted in the feed port protects the operator from the ejection of cutting waste. It is strictly forbidden to pass your hands beyond this steel deflector.

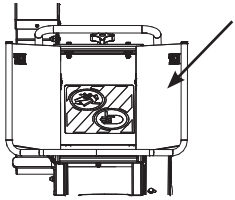

Feed funnel:

This funnel is mounted on the inlet of the hopper, opposite the operator area. If, despite the prohibition, the operator passes his hands over the protective deflector, this funnel hinders access to the crushing chamber in such a way that an injury caused by the blades at the inlet hopper is practically impossible.

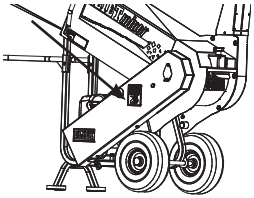

Belt protection cover:

The protective guard protects moving parts of the drive that could cause injury.



Safety Kit:

It is for the sake of your safety that ELIET cannot sufficiently emphasize the importance of using all the protections accompanying the delivery of the machine. This includes protective glasses, hearing protection and a pair of multi-purpose gloves.

7.3 Safety instructions

7.3.1 General Safety Instructions

- The owner of the machine must keep this instruction manual for the entire life of the machine. The operator will use it as a reference structure to operate and maintain the machine according to the rules of the art. If you are unsure how to perform an operation, always consult this user manual.
- If the instructions in this manual are not clear, please do not hesitate to ask your ELIET dealer for further explanation. In addition, the ELIET Help Desk is always at your service to answer your questions during office hours on the number (EU +32 56 77 70 88).
- Refer to the dealer chapter (see : Chapter 8) and immediately check whether the machine has been delivered to you according to the instructions.
- When purchasing the machine, ask the dealer or a competent person to explain how it should be used correctly.
- When using the machine, follow all safety instructions. Read all instructions for using the machine carefully. All of these instructions are intended to ensure your personal safety.
- Always follow the current instructions of the labour inspectorate for the prevention of accidents.
- Take note of the safety notes on the machine in the form of stickers and pictograms.
- The original structure of the machine must not be modified under any circumstances without the prior explicit written consent of ELIET EUROPE SA. (Belgium).

7.3.2 Prudent and rational use

- This machine is designed to shred branches, pruning wood, leaves and all other organic garden waste. It should never be used for any purpose other than those stated here.
- Grinding is a heavy physical activity, so you will need to take regular breaks, eat and drink enough.
- It is not recommended for people with heart problems to work with the machine.
- Think about every operation you perform with the machine. Don't let yourself be distracted by the force of habit. Never act impulsively or reflexively.
- Don't take undue risks despite the presence of multiple safety features.
- Never work with a machine that is not fully assembled. Check the perfect assembly of the machine according to the specifications given in this manual.
- It is forbidden to use the machine without the feed funnel.
- Never use the shredder with an unmounted base, handle, or drain nozzle.
- Never use a step stool to introduce green waste into the funnel.
- This model can shred branches with a maximum diameter of up to 50 mm. For your own safety, it is strictly forbidden to exceed this limit.

- Do not constantly shred branches with a maximum diameter of 50 mm. In principle, a maximum of 10% of the material to be shredded can have a cross-section of more than 40 mm.
- Never shred frozen branches.
- It is forbidden to throw foreign objects into the machine (e.g. cigarettes, charcoal)
- Never put your hands beyond the metal spatter when the machine is in operation.
- Avoid introducing foreign bodies into the machine (ropes, stones, metal, plastic, textiles, etc.) or any other material other than garden plants.
- For ethical reasons, ELIET, with the help of its machines, is totally opposed to the shredding of animals and any other form of living organism.
- It is forbidden to use metal tools to push organic waste into the funnel.
- Never use your feet to push green waste into the feed hopper.
- Never insert any tools into the loading hopper (e.g. fork, shovel, etc.).
- Make sure that the place where you work has a minimum light intensity of 500 lux.
- Always work on a stable and flat surface.
- Never work if the machine is in an inclined position.
- Never attempt to change any machine parameter or perform maintenance while the engine is running.
- The use of the machine can generate explosions when working in an environment close to flammable products, fuel vapours, gases, etc.

7.3.3 User Responsibility

- The person working with the machine is supposed to know the safety instructions. It is fully responsible for the machine towards itself and third parties.
- The machine operator is expected to have a certain maturity that allows him to make decisions based on common sense.
- The machine must not be entrusted to a teenager. However, this does not apply to young people over the age of 16 who learn to use them under adult supervision.
- Disabled people can only work with the machine if they are accompanied.
- Children (< 16 years old) and pets must be kept away from the machine (> 3 m).
- ELIET advises not to lend this machine. If you do, only lend it to people who are familiar with all the controls. Always read the user's attention to possible hazards and require the user to read the manual before using the machine.
- Anyone who will be working with this machine must be well rested and in good physical condition. As soon as the user starts to feel tired, he or she should take a break. It is forbidden to work with the machine after consuming alcohol or narcotics.
- The user must write a list of the number of hours of operation. This will allow the regular maintenance schedule of the machine to be properly followed .

7.3.4 Personal protective equipment (PPE)

- Working with this machine requires the right clothing: clothing that covers the entire body, sturdy work gloves and closed-toe shoes with non-slip soles.
- It is forbidden to wear loose clothing (e.g. a scarf). If the operator has long hair, he will tie it in a ponytail and wear a cap or headband.
- In order to protect the most exposed and delicate organs as well as possible, ELIET recommends the use of noise-cancelling headphones, safety gloves and work glasses.
- When wearing hearing protection, increased attention and vigilance are necessary since noises that indicate danger (such as screams, signals, unusual mechanical noises,) will be attenuated and therefore only faintly audible.
- ELIET advises against the use of a mobile phone, a portable MP3 player, or any other similar device during work.
- Shredding work can generate dust. If your respiratory tract is irritated by this dust, ELIET recommends wearing a dust mask that complies with 89/686/EC.

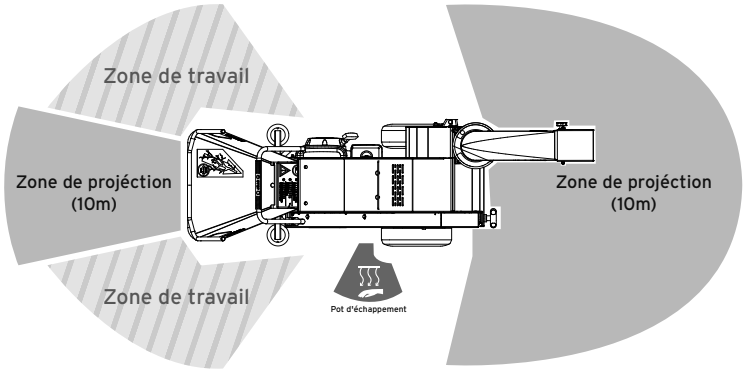

7.3.5 Hazardous areas

- When the machine is running, make sure that no one approaches it within a radius of 10 m, especially around the area where chips ejected via the discharge nozzle are projected.
- To feed green waste into the funnel, the operator is preferably next to and behind the machine. Do not lean over the feed funnel, so you will stay out of reach of possible chip rejects.
- Do not stand in the crushing ejection area when the machine is running.
- Contact with moving parts may result in injury or damage. So keep your hands , feet, or floating clothing away from moving parts.
- The machine can only be used in its normal working configuration.
- It is absolutely forbidden to tilt the machine downwards during crushing to lower the initial feed height.

- Don't take any chances when someone enters the danger zone: stop the engine immediately.
- Children and pets should be kept away from the machine.
- As soon as you move away from the machine, you are required to stop the engine.
- When the motor is running, the user must devote all his attention to the handling and the various control elements of the machine.

7.3.6 Regular maintenance

- Periodic maintenance is essential. Therefore, carefully follow the maintenance schedule provided in this instruction manual.
- Keep a maintenance record of each maintenance operation carried out in detail.
- Controlling the sharpening of the blades is essential to ensure the proper functioning of the machine. Sharpen the blades in time, and when necessary.
- The correct tightening of the blade bolts must be checked within the first 5 hours of use after the machine is put into operation, after the replacement with new blades, or after the blade is turned over. The ELIET blades are reversible, however there is a positioning to be respected (See §11.5.6 "Turning over or replacing the shredder blades", page 44).
- When some worn or damaged parts need to be replaced, always contact your ELIET dealer and ask them for original spare parts. This is important for your own safety (find an authorized ELIET dealer in your area via www.eliet.eu).
- Repair and maintenance operations can only be carried out when the engine is stopped. Always wait for the motor and blades to come to a complete stop, and for the grinding chamber and impeller to be completely empty before performing any manipulation.
- Always wear the appropriate clothing to perform this maintenance.

Use the machine with respect for the environment :

- Do not let the machine run unnecessarily without working.
- Avoid wasting gas when filling the tank.
- Maintain the engine regularly to ensure proper operation.

7.3.7 Electrical Machinery Specific Guidelines

If you have a machine equipped with an electric motor, observe the following instructions:

- The electrical circuit to which the machine is connected must be equipped with a residual circuit breaker tripping at a value less than or equal to 30 mA.
- The electrical network of the home where the machine is used must be equipped with a ground connection. Have it checked by a licensed electrician.
- The motor start switch is equipped with a built-in thermal protection, it is automatically switched off when the internal temperature of the motor reaches the maximum prescribed

value due to prolonged high load, overload, blockage, or cooling fault, or the use of an extension cord that is too long or with insufficient cross-section. Allow the engine to cool down and then restart it according to the starting procedure described.

- ELIET recommends using an extension cable that complies with the CE standard and offers a Waterproof to IP65 or higher.
- Never use an extension cord that shows signs of damage. This usually causes a real risk of short circuiting or even electrocution.
- Make sure that the extension cable is not near hot or sharp objects , which can damage the cable.
- When the machine is plugged into an outdoor outlet, it must provide a seal greater than or equal to the IP65 standard.
- Make sure that the plug is always suitable for the socket, and that the pins fit completely into the socket. Otherwise, there is a real danger of electrocution. If the plug does not match the outlet, have an electrician replace the plug or outlet.
- Never remove a plug by pulling on the cable, as this may cause a short circuit.
- It is forbidden to use the machine when it rains. Do not expose the machine to splashing water.



Warning: The use of an unsuitable extension cable (wire thickness, length and quality of the plug) can seriously damage the machine. This damage is never covered by the warranty.



Warning: It is possible to electrocute yourself by plugging a plug into the network if the user's hands are wet



Warning: Electrical appliances can cause a short circuit when exposed to water and moisture. So you need to keep the electrical components dry.

8. Distributor's obligations

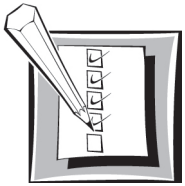



Warning: As an ELIET dealer, it is your duty to explain to your customers how the machine works and, in addition, to indicate the potential dangers associated with the use of the machine. To this new owner, carefully list the maintenance points of the machine. Repeat these explanations until he has assimilated them perfectly.



Warning: As a manufacturer, ELIET expressly reminds its dealers that they must inform their customers that all bolts securing the blades must be tightened during the first 5 hours of use.



TO ENSURE SAFETY, ALL BLADE BOLTS MUST BE TIGHTENED DURING THE FIRST 5 HOURS OF OPERATION. (TIGHTENING TORQUE: 10 Nm.)

Failure to do so can result in serious injury or death. Beyond the damage suffered by his machine, the customer will not be able to benefit from the intervention of the warranty. The list of tightening torques is provided in the appendix A3, page 56.

- ELIET machines are packaged in accordance with the usual rules for safe transport. Deliveries are always made ex works. ELIET declines all responsibility in the event of damage incurred during transport.
- If the packaging is found to be damaged upon receipt of the goods, check the condition of the machine as a precautionary measure. Report each anomaly on the delivery note before signing it for receipt.
- If the machine is damaged, a complaint will be made immediately after delivery to the transport company.

When it is delivered, the machine is not fully assembled. This assembly is the responsibility of the dealer. Here are some guidelines for him:

- The carrying handle is to be mounted. It is fixed with two M6 bolts in the holes provided (use of 2 x 10mm socket wrenches).

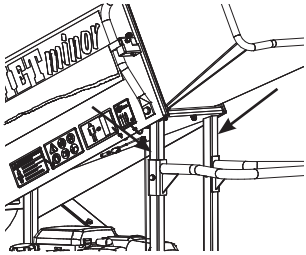

- The funnel at the front of the inlet hopper must first be mounted and secured with the M6 bolts, washers and nuts.

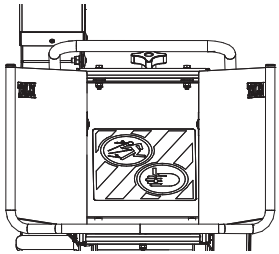

- The wheel axle is integrated into the chassis. The wheels then slide onto this axle. If necessary, grease the inside of the nylon wheels (Sunoco Multipurpose LR-EP2) beforehand. Finally, the wheels are locked onto the axles by means of "Starlock" washers.

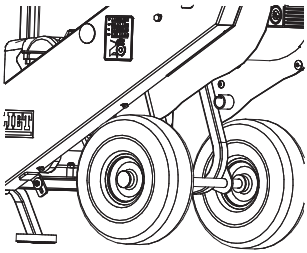

- The chip discharge nozzle must also be assembled. Appendix B2 of this manual on page 53 provides instructions on how to change the orientation of the chip discharge nozzle.
- The dealer adjusts the belt tension according to the description in the maintenance section (see Section 11.5.5 "Adjusting the belt tension").
- Every ELIET dealer is responsible for the longevity of the ELIET machine. Before delivering the machine to the customer, he will carry out an additional lubrication of all the hinge points.
- A machine is packaged without oil or fuel. The dealer will ensure that this point complies with the requirements of this manual (or those of the engine).
- The maximum speed of the combustion engine should be set at about 3200 rpm and should not generate vibrations., the idle speed should also be adjusted in order to avoid any vibrations or resonances.
- The dealer should test the machine for a certain period of time while checking that everything is fully functional (e.g. safety switches, emergency stop).

9. Instruction manual



9.1 Due diligence

Attention : Before you get to work, get into the habit of carrying out the following checks:

Checklist

1. Check for wear and tear and make sure the blades are tightened properly. Tighten the bolts on the blades to check it. If the blades need to be sharpened, do it immediately. If you find cracks in a blade or in the blade shaft, you must replace it immediately (see §11.5.6. Turning and replacing the blades).
2. Check the oil level of the machine. To do this, remove the oil dipstick from the engine and make sure that the oil level is not below the minimum mark (see if necessary §11.4.2 Engine Oil Level Control).
3. Make sure that the fuel tank is sufficiently filled beforehand. Otherwise, you must top up your fuel (see §9.2 Feeding the tank).
4. Make sure that the air filter is not too dirty (if applicable, see § 11.4.3. Cleaning the air filter).
5. Check that the access door to the grinding chamber is securely locked.
6. Check whether the belt tension is sufficient (see § 11.4.5. Belt tension control). If not, adjust it (see §11.5.5. Belt tension adjustment).
7. Before you get to work, check that all the housings are present and that they are secure.
8. Before starting the work, check the grinding chamber and impeller for grinding residues.
9. Check that all safety devices on the machine are working properly (see § 7.2 Safety devices).

Once these points have been checked and approved, you can prepare the work area (see § 9.3 Preparation of the work area) and go there with the machine.

9.2 Feeding the tank:

If the amount of petrol in the machine is insufficient, then it is necessary to top up the petrol. It is recommended to always use new gasoline. Unleaded petrol, preferably 98 E5, should be preferred.



Warning: Under certain circumstances, gasoline is extremely flammable and highly explosive. Ignition and explosion of gasoline can cause serious injury or damage. Please note the following.

- The petrol top-up can never be made while the engine is running. Let it cool for a few minutes first before topping up.
- Use only fresh gasoline, ideally less than 30 days old since purchase. In order to prolong its shelf life, additives can be added, or the use of "Alkylate" fuel can also be a good alternative for occasional or widely spaced uses.
- Store gasoline in a specially designed tank. Store gasoline out of the reach of children.
- Never top up the tank where the machine will be used next. Keep yourself at least 10 m away from this area. This way, you avoid any risk of fire.
- Clean the outlines of the petrol cap and remove dirt. Do not fill the tank until overflowing. Fill the tank to about 10 mm from the rim. Do not fill it all the way to the maximum.
- Always make sure to use a funnel or spout to top up the gasoline. Your ELIET dealer will provide you with the appropriate funnels.
- Screw the cap back on the tank as quickly as possible. If you spill gasoline on the engine while refuelling, clean it immediately.
- Be careful not to spill gasoline on your clothes. If so, change them immediately.
- It is dangerous and therefore strictly forbidden to top up near smokers or near a live flame.
- If fuel is ingested or splashed into the eyes, seek medical attention immediately .
-

9.3 Preparing the work area

- The work area must first be clear.
- In addition, the access roads to green waste must be duly cleared beforehand, to prevent the operator from tripping over any obstacle. Once again, the user must ensure his safety.
- It is forbidden to operate the machine on sloping ground (no work sloping forward, backward or sideways).The waste to be shredded must be sorted beforehand. This will ensure that the waste to be shredded does not contain any foreign objects that could enter the machine.
- Foreign objects are defined as anything that is not organic (e.g., metal, stones, plastic, rope, textiles, etc.), as well as organic materials larger than the recommended diameter. These objects can not only seriously damage the machine, but also be thrown and seriously injure the operator.

9.4 Starting the engine



Attention: Before starting the machine, remove any dust or dirt from the engine as much as possible, especially between the engine cooling fins. Fouling reduces engine cooling and can lead to a fire.



Warning: The blade shaft is driven directly by the motor. There is no clutch of the blades. The machine is therefore dangerous as soon as the engine is running. The engine should therefore be switched off as soon as you find yourself in a situation where you lose control of your work. How do I stop the machine quickly?

By pushing the emergency stop lever forward, the engine is stopped ;
By turning the ignition switch (rotary knob) on the engine to the "OFF" position.

- Remove grinding residues from the grinding chamber before starting the machine, if necessary. Failure to do so could result in damage to the starting mechanism. If the engine does not start, check that the turbine is not clogged or blocked by chips that remain stuck in it .
- Make sure the inlet hopper is empty (no green waste, no tools, etc.).
- it should be taken into account that the motor can only be started when the emergency stop lever and the access door to the grinding chamber are properly positioned.

The machine is therefore dangerous as soon as the engine is running.

The cutting mechanism can eject unwanted cutting residues at any time. It is therefore necessary to position the machine and orient the deflector valve so that the projection of chips cannot cause damage.



Warning: Before starting the machine, please wear adequate protective equipment (gloves, safety glasses, hearing protection).

Before starting the engine, check whether it contains enough oil or fuel if this has not been checked beforehand.

To check and top up the oil level, refer to § 11.4.2 Engine Oil Level Check.

For the refuelling, see § 9.2 Top up of fuel.

1. Open the Fuel Tap.
2. Depending on the make of the engine, position the lever – or turn the ignition switch to "ON".
3. Set the choke to "Close". Point the lever in the direction of the arrow.
4. Place the engine speed lever in the maximum position (hare symbol).

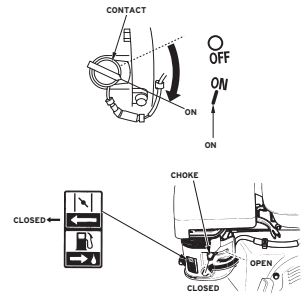

Pull the pitcher rope gently until you feel a resistance and then pull it quickly and firmly. Allow the starter cord to wrap freely.

5. As soon as the engine is running, quickly position the choke lever to the "Open" position. This is to prevent the engine from consuming an excessive amount of petrol. Otherwise, the engine will slow down and start to give off a lot of smoke, and it will eventually shut down. Then restart the engine without putting the choke on.

If the engine cannot be started, it may mean that the spark plug is flooded or dirty. It should then be cleaned or replaced (see Chapter 11.5.2 Checking or Replacing the Spark Plug).

Info: The engine starting procedure may differ slightly depending on the engine brand. Also consult the engine manual on this subject, in the chapter "General", §6. The main elements are represented in different executions.

9.5 Engine shutdown

PUSH THE EMERGENCY STOP LEVER FORWARD = ENGINE STOPPED

- Place the engine speed lever at idle - or position the ignition switch button in the OFF position to stop the engine.
- The machine can also be turned off by pushing the emergency stop lever forward.
- If necessary, turn off the fuel inlet valve.

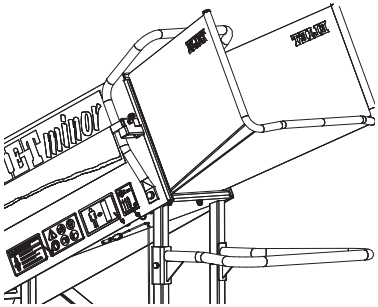

Caution: The blades will always turn until the engine has come to a complete stop. Do not perform any manipulation until the blades are completely stopped.

9.6 Working with the machine



Warning: The housings protect rotating parts. So don't place your hands or other limbs behind these crankcases when the engine is running.

9.6.1 Before you start work

Pay attention to the following safety precautions before starting work:

- The operator shall wear the protective clothing, gloves and other safety accessories as recommended in this instruction manual (see § 7.3 Safety instructions).
- As a good gardener, make a schedule and work in an orderly manner. This approach allows you to have a good overview of your work and to avoid accidents or wrong manoeuvres.
- Before shredding is carried out, the waste to be shredding should be systematically sorted : large branches, small branches, leaves and anything that is wet. Also, make sure they don't contain any foreign objects.
- Orient the deflector valve before working with the machine. Make sure you don't have to go to the spray area of the discharge nozzle to introduce the pruning waste.
- Only start the engine where you plan to grind.
- Make sure that the extension cable (electric motor) does not cross the access routes for the wood for shredding. Otherwise, you may get caught in it.
- Do not start a machine with a gasoline engine in a confined space. The release of toxic gases generated by the engine could lead to a serious risk of poisoning.

9.6.2 During work



Caution: During the shredding work, the operator can never put his hands beyond the anti-spray deflector. By lifting this deflector, the operator compromises his own protection against chip backflow by projection.

- When you put the waste to be shredded into the feed hopper, hold it firmly. These are driven into the machine by the rotation of the blades. If you let go of them, they will rush too quickly into the machine which will inevitably jam. It's up to you to determine the intake cadence by holding or releasing your grip. This intake rate will vary according to the thickness of the temples.
- When you "guide" the waste to be shredded, listen to the engine speed.
- If you notice that it is struggling (slows down significantly), immediately remove the material engaged to allow it to return to its initial regime.

- Feeding the machine too much at once doesn't make sense, you will get faster processing by limiting the volume of waste introduced.
- Feed the branches into the feed hopper from the thickest side.
- Preferably insert the branches on the right side of the feed hopper. This will extend the time it takes to shred the cutting waste before it is sucked up to the turbine, and the size of the cutting waste will be minimized.
- If the volume of leaves to be crushed is substantial, ELIET advises alternating leaves and branches.
- As soon as you hear a strange noise, stop work immediately. Immediately stop the engine (emergency stop lever) and investigate the cause of the operating incident. Before proceeding, make the necessary repairs.
- If you notice that despite the prior sorting of the waste to be shredded, a foreign object has entered the machine, stop the engine immediately. Remove the problem object and make sure it has not damaged the machine. In the event of damage, make the necessary repairs first.
- In principle, the motor should stop spontaneously when the grinding chamber is opened. If a problem in the electrical system prevents this from being stopped, the operator must immediately switch off the machine and stop using it until the cause of the anomaly is resolved.
- If there is an obstruction in the grinding chamber, turn off the machine immediately to clear the obstruction. Caution: wait for the blades to come to a complete stop before doing any manipulation.

9.6.3 In the event of an engine shutdown

The engine can stop in the event of overloading, too much branching, blockage in the evacuation nozzle, lack of fuel, closing of the fuel valve, too low engine oil level, incorrect positioning of the emergency stop lever, imperfect closing of the access door to the grinding chamber. In these cases, the shredder can easily be restarted. Follow these steps :

1. Check the fuel level in the fuel tank (see §9.2 Fuel top-up).
2. Remove branches engaged in the feed hopper.
3. Pull the launcher handle. This will show if the blade shaft is still blocked. As soon as you feel resistance and can no longer pull the handle, release it. There is no need to pull on the handle by force, as you will only break it or overload the starting mechanism.
4. If the blade shaft jams, empty the grinding chamber. To do this, you need to open the grinding chamber. The access door to the grinding chamber is closed by a clamping wheel. Unscrew it completely and then open this door.

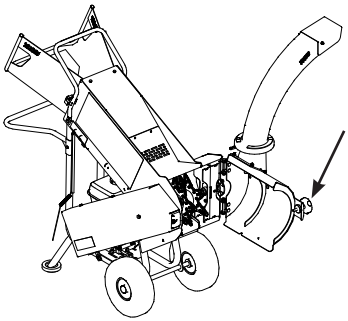



Caution: You should always wear gloves for any handling. When you empty the grinding chamber, you brush against the blades. The blades are extremely sharp and therefore present a real risk of cuts. Be careful and try to avoid contact with the blades.

1. Remove all material residues from the grinding chamber. Close the access door to the grinding chamber and check that this has been done correctly.
2. If a residue is blocking the turbine propeller, remove the contents of the turbine using a tool or by carefully rotating the propeller.
3. When the evacuation nozzle is clogged, open the access door to the grinding chamber to clear it. After the evacuation nozzle has been cleaned, close the access door to the grinding chamber and lock it by screwing on the clamping knob.
4. When you feed the machine again, go more moderately to prevent the grinder chamber from jamming again.

Tips to avoid blockages of the cutting rotor and turbine propeller

- Do not introduce branches with a section greater than that recommended (max. 5 cm), or too much branching with a final volume exceeding the maximum recommended cross-section (max. 5 cm).
- Do not let go of the goods when you put them in the loading hopper, accompany them by holding them if necessary, feed the machine making sure that the engine does not struggle too much.
- Also keep an eye on the chip discharge flow at the nozzle outlet: a low flow can indicate the onset of a jam, or a low engine speed and of course also the cutting rotor slowed down too much by excessive load.
- Insert the goods to be shredded, ideally on the right side of the inlet hopper wall; This will allow the chips to be chopped more finely during the grinding process, which will also reduce the risk of clogging the impeller and discharge nozzle.
- Do not fill the inlet of the loading hopper more than half, to allow a sufficient volume of air to enter the shredding chamber and to ensure "a good air flow". Good air circulation will also limit the risk of blockages and jams. Pack down the foliage, or any handfuls of leaves, to avoid completely blocking the entrance to the loading hopper.
-

10. Machine transport

- This machine can only be moved and transported by adult people.
- To move the machine, the grinding chamber and the impeller must be emptied. It is essential that all branches are removed from the feed hopper .
- During loading of the machine, children, animals and unauthorised persons must not enter within a radius of 3 m.
- If you want to move the machine (even for a few meters), you should always wait for the contents of the grinding chamber to be evacuated. It is essential that no more material is present in the feed hopper .
- Before transporting the machine, the engine must be stopped.
- If the machine should tip over, straighten it out as quickly as possible. This will reduce the risk of engine oil spreading to the air filter and petrol leaking out of the machine.
- To load the machine into a van or trailer, use non-slip loading ramps. Make sure they are securely attached to the vehicle or trailer.
- The slope may not exceed 25° under any circumstances.
- Never move or place the machine on a floor that cannot support the weight of the machine and the person (for information: for the machine, take into account a net weight of about 90 kg).
- If you are climbing a slope, the blade shaft should be placed first. Most of the weight of the machine is located on the front part.
- If you are going down a slope, the blade shaft should be placed last .
-

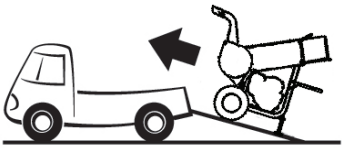

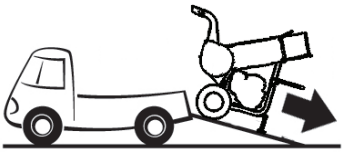

- Never use the machine to transport objects or people.
- Choose your transport route wisely so that you encounter a minimum of obstacles.
- Opt for a flat and uneven route.
- Make sure to leave a sufficient clearance area behind the ramps (4 m).
- Make sure the vehicle's parking brake is fully engaged.
- When loading the machine, act with caution to prevent the machine from tipping over and causing an accident.
- The maximum degree of lateral slope tolerated by the machine is 10°.
- During the transport, the machine must be securely and firmly secured to the vehicle.
- When moving, never tilt the shredder more than 12°, as this may cause it to tip over.
- Be careful not to overload the transport vehicle or trailer, the shredder has a net weight of about 90 kg.
-

11. Maintenance



11.1 General

ELIET recommends that you present your machine annually to an authorized ELIET dealer for full maintenance and inspection (to find the nearest authorized ELIET dealer, go to www.eliet.eu). Your ELIET dealer is always at your disposal for questions and advice. It has a supply of genuine ELIET parts and lubricants. Its staff can call on the advice and service of the ELIET helpdesk at any time and thus offer you an impeccable after-sales service.

Caution: For repairs, use only original spare parts with the ELIET label. These parts have been manufactured according to the same quality criteria as the original parts.

All maintenance must take place in a room specially provided for this purpose. This room must be:

- Spacious
- Dust-free
- Easily accessible
- Tidy
- Well lit
- Calm

Compliance with these criteria must allow maintenance to be carried out in optimal conditions.

STOP

Caution: Negligence during maintenance may jeopardize the operator's safety later on. Consequential damage resulting from a lack of maintenance or improper maintenance is not covered by the warranty. Leave the maintenance to experienced technicians who are familiar with the machine and are recognised by ELIET .



Caution: All maintenance work involves shutting down the engine.



Caution: Any maintenance operation involves wearing protective gloves or even protective glasses . This set is supplied in a safety kit that accompanies the delivery of the machine.

11.2 Maintenance scheme

11.2.1 Lubricants

Engine (0,75l)	SUNOCO SUPER DENALUBE SAE 20 W 50 API SF / CC
Points of articulation	NOVATIO WHITE SUPREME GREASE
Axles	SUNOCO VET MULTI-PURPOSE LR - EP2

11.2.2 Private maintenance

Special maintenance for retightening the blades

Once mounted on the blade shaft, the blades "definitely take their place" after a break-in time. During this time, the bolts may become loose. Over time, the blades can become loose and the blade mounting bolts can become damaged and break, and in the long run and if left unchecked within the recommended time, could become detached and cause irreparable damage to the blade shaft, the impeller, the exhaust propeller, the access door to the grinding chamber and the discharge nozzle. Or even be ejected from the machine via the inlet hopper or the discharge nozzle. You have an obligation to protect yourself from this type of avoidable problem by scheduling this particular maintenance during the brief break-in period.

WHEN:

During the first 5 hours of use after the new machine is put into operation.
During the first 5 hours after the blades are turned over.
During the first 5 hours after the blade is replaced.

HOW:

Check the torque of all blade bolts and tighten them if they need to (torque: 10 Nm).



Caution: Use a suitable and calibrated torque wrench.



Warning: Omitting this special maintenance may cause the blades to detach during work. Doing so will cause serious damage to your machine and could result in permanent bodily harm or death to the user or others in the vicinity of the machine. Any damage resulting from this negligence is not covered by the warranty.

11.2.3 Periodic maintenance schedule

Routine check-ups before each work session

- Carry out a visual check of the condition of the machine (see § 11.4.1 Visual inspection).
- Check the engine oil level. (See 11.4.2 Engine Oil Level Control).
- Cleaning the air filter. (See 11.4.3 Cleaning the Air Filter)
- Make sure the machine does not show any signs of abnormal wear or cracks.
- Check that no bolts are seized (blades, wheels, bearings, motor, etc.).
- Sharpening the blades. (See 11.4.4 Sharpening the Blades)
- Belt tension control. (See 11.4.5 Belt Tension Control)
- Cleaning the machine. (See 11.3 Cleaning the machine)

Maintenance after 20 hours

- Daily maintenance (see § 11.2.3 Periodic maintenance schedule).Changing the engine oil
- Checking or replacing the spark plug.
- Cleaning or replacing the air filter.
- General lubrication.
- Belt tension adjustment.
- Turn the blades over, sharpen and/or replace them.

11.3 Clean the machine

11.3.1 The importance of cleaning

ELIET recommends cleaning the machine after each use. It is recommended to take advantage of each cleaning to carry out an inspection of the machine, which allows you to check the good condition of the parts and the machine. This will allow you to intervene in time and prevent breakdowns. You will also extend the life of your machine.

Failure to clean the machine leads to:

- Premature wear.
- Increased risk of fire.
- Reduced engine cooling.
- An increased risk of short circuit.
- A decrease in performance.
- Wear and tear of the safety stickers.
- Late detection of wear or the appearance of possible cracks.



Warning: A machine that is no longer functioning optimally can jeopardize the safety of the user.



Warning: Pieces of wood, chips and dust can accumulate under the fairings and ignite from overheating. Remove these build-ups near electrical components or the engine. Clean the machine thoroughly after each use.



Caution: Wear proper clothing for cleaning. Gloves must be worn systematically.

11.3.2 What does cleaning involve?

When cleaning, you should go through the entire machine and inspect all its components. Make sure that the parts are not deformed, that the welds do not have any cracks and that the various components do not have excessive play.

The important points are:

- Welds of the blade shaft
- Bolts for fixing the blades
- The bolts for fixing the blade shaft
- The ejection propeller welds and turbine welds
- The anti-spray flap in the feed hopper

The motor must remain free of dust and dirt. The cooling fins should be clean and the evacuation nozzle area should also be clear. To avoid clogging the fuel tank, the filler cap area should always be clean.

The bearings must be cleaned and free of dirt clogged on lubricant residues. Reapply lubricant after cleaning. If you notice any problems, do the necessary repair or replacement work first . To do this, please contact your authorized ELIET dealer (to find the nearest authorized ELIET dealer, go to **www.eliet.eu**).

Cleaning the machine goes further than simply cleaning its outer shell. You need to open all fairings to clean the less accessible areas as well.

The main points should be taken into account:

- Dirt build-up (chips, wood residues, dust, sand, sticky sheets, etc.) inside the machine must be removed. Use a soft brush or vacuum cleaner to remove this dirt.
- Fibrous waste that accumulates around the blade shaft and motor pulley must be removed so that it does not damage the bearing protection seals.
- Remove any build-up of dirt that sticks to the inside of the grinding chamber.
- Remove any accumulated dirt that adheres to the inside of the impeller, on the exhaust impeller, the access door to the grinding chamber, and in the evacuation nozzle.



Caution: You should always wear gloves for any maintenance. When cleaning the grinding chamber and impeller, you brush against the blades. The latter are extremely sharp and therefore present a real risk of cuts. Be careful and try to avoid contact with the blades.

- Clean the chassis with a dry cloth. Especially in areas where there are stickers with safety messages (do not use cleaning products that may damage the paint or stickers).
- If the safety messages on a sticker are no longer legible, replace them. Original stickers are available from your ELIET dealer.
- The use of compressed air is a great help to clean a number of elements very easily.
- Steam cleaning of the machine is allowed. General lubrication is recommended after the machine has dried completely. However, avoid splashing water on bearings, protective housings and various filler caps. Since water is the main cause of oxidation, contact with it should be avoided.
- Give the engine time to cool down before directing a high-pressure stream of cold water into it.
- Using a vacuum cleaner is a recommended way to remove dirt from areas that are not easily accessible.



Warning: If you need to remove a protective guard before maintenance work, you should always reinstall it properly after maintenance. The various fairings and protective housings are designed to guarantee your safety.

11.4 Routine check-ups before each work session

11.4.1 Visual inspection

Make sure that parts are not deformed, that welds do not have any cracks and that the individual parts do not have excessive play. If you notice any problems, carry out the necessary repair work first. **Check that the machine motor is running at the prescribed maximum speed (approx. 3200 rpm) and that there are no excessive vibrations or resonance** (rev counter available from your ELIET dealer). Never change the standard engine settings.

11.4.2 Engine Oil Level Check

Refer to the 'Engines' section in § 6 'Main components' to check the level using the oil dipstick and the various drain and booster plugs.

- Place the machine on a flat surface and take a clean cloth, then unscrew the dipstick.
- Generally, the oil level cannot immediately be read correctly. Wipe the dipstick, put it back on its neck without screwing it back on.
- The oil level can be correctly observed when you dip the dipstick for the second time.
- The oil on the dipstick should be between the minimum and maximum level.

If the oil level is too low, add more through the booster cap. Use only the recommended oil. Don't add too much oil at once and check the level regularly.

11.4.3 Cleaning the air filter

- The air filter design varies depending on the make and type of engine.
- The air filter sits under its protective cap, next to the exhaust and close to the engine fuel tank.
- Remove the protective cover.
- Extract the air filter, which is usually composed of a foam pre-filter element and a honeycomb paper filter element.
- Simply clean the pre-filter element (if present) by rinsing it with a little gasoline and blowing it with compressed air.
- Clean the paper filter element by blowing it with compressed air.
- Replace these filter elements in their original position after cleaning.



Caution: If the machine should tip over, check the air filter as soon as possible. Since the engine is in an unusual position, oil could flow from the crankcase to the air filter. The oil no longer allows air to pass through if it soaks the filter paper. So replace an oil-soaked air filter.

11.4.4 Sharpen the blades

The yield and quality of the machine's grinding depend largely on the condition of the blades. Improve your working comfort by taking the time to check and possibly sharpen the blades before each work session.

SHARP BLADES = MAXIMUM PERFORMANCE



For information: The blades can be sharpened without having to be disassembled. You can do this work using a small angle grinder with a metal disc.



Warning: Always wear protective eyewear and hearing protection when sharpening blades. Gloves are also mandatory during any maintenance work.

Warning: If the machine is tilted, fuel may come out of the tank filler cap. Siphon excess fuel from the tank beforehand, as sparks from sharpening can lead to a fire.

- Open the access door to the grinding chamber by unscrewing the clamping knob.
- When sharpening, use an angle grinder and a suitable disc. Always respect the original angle of the cutting edge and sharpen only the bevelled part of the cutting edge of the blade. Limit sharpening to what is strictly necessary to restore the blades to their cutting power for as long as possible. Sharpening wisely and in time extends the hold and service life of the blades.

For information: As soon as the top of the cutting edge is rounded, the blades are worn out and they must be replaced or returned.

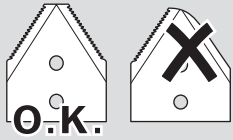

Each blade has two sides:

- The front side of the blade has two bevelled cutting edges. (A)
- On the back, the tooth profile of the cutting area is clearly visible. (B)

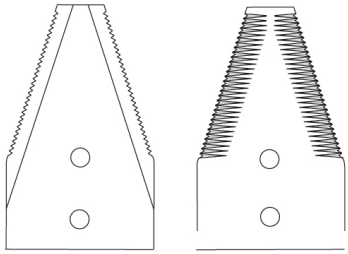

A sharp edge and a correct cutting angle are essential for efficient grinding. The blades must be sharpened properly for these two characteristics to be met.

- When the blades become blunt, their edge wears away and takes the form of a wider groove. **(1)**
- By grinding a little metal from the cutting edge, you eliminate that wide flute and make a sharp edge again. **(2)**
- To do this, run the disc along the bevelled edge.
- Note: Regular blade sharpening reduces the amount of metal you will have to sharpen in order to get a new sharp edge. The sharpening operation will then be very short and will offer a perfect edge every time.
- Avoid grinding for too long in the same place. You will avoid thus a local discoloration of the blades, which would indicate a overheating and a change in the structure of the material (and its hardness) at this location.

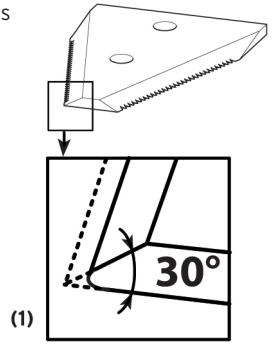

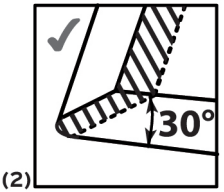

It is essential not to change the existing cutting angle when sharpening.

(3: Blade not sharpened)

If the cutting angle is not respected by grinding a blunt angle (4) or an interrupted cutting angle (5), the blades will be slowed down by slicing the wood and the machine will lose its power. A cutting angle that is too sharp (6.7) will create a weakened cutting edge, which will significantly reduce the hold of the blades.

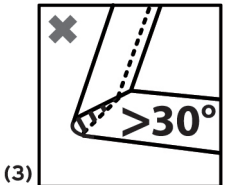

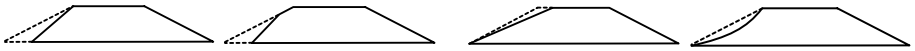

(4) **(5)** **(6)** **(7)**

- Never sharpen the back of a blade. On the RESIST/6™ blade, the profile is located at the back. If you sharpen the teeth, the blade loses a lot of its cutting power.
- It is the tip of the blades that is most stressed during grinding. It is therefore necessary to limit sharpening to what is strictly necessary to prevent it from weakening.
- With each sharpening, a little material is removed, which reduces the active edge. The cutting edge can be sharpened up to half the width of the blade tip. If you exceed this limit, you will jeopardize the strength of the unused edge. At this point, it is recommended that the blades be turned over (see § 11.5.6. Turning and replacing the blades).
- A rounded blade tip means less efficiency when grinding. It makes no sense to continue sharpening, and it is high time to return or replace the blades.

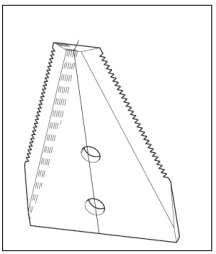

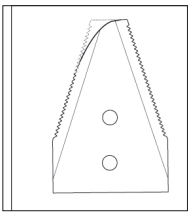

11.4.5 Belt tension control



Warning: Check the belt tension only if the motor is off. The spark plug cap should be removed.

- The internal belt guard is equipped with a removable black cap. By removing this plug, you can clearly see the transmission V-belt through this opening.
- If you press the strap down with your thumb (pressure corresponding to a weight of about 7.5 kg), it can flex by the equivalent of 1 cm. If this is the case, the tightening is sufficient.
- After checking the belt tension, the protective cap should be replaced on the internal protective housing.
- Adjust the belt tension if you find that it is too low or too high (see Section 11.5.5, Adjusting the Belt Tension).
- An insufficiently tensioned belt can cause it to slip on the transmission pulleys or hit the protective housings, so its life will be hanging at an adequate tension.
- A new belt will naturally relax during the first few hours of operation but also throughout its life. It is therefore advisable to re-tighten the belt after 5 hours of operation (see § 11.5.5, Adjusting the belt tension).

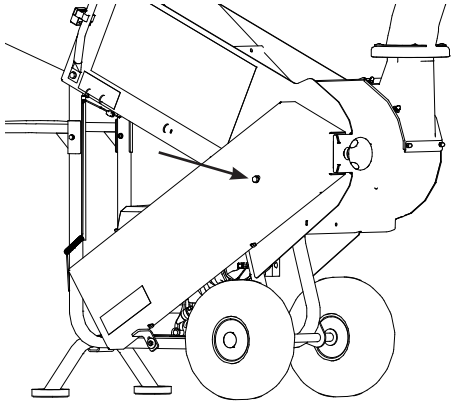

11.5 Maintenance after 20 hours of operation

11.5.1 Engine Oil Replacement

- Make sure that the engine is installed on flat ground and is stopped.
- At the rear of the engine, under the engine floor, you will find a cap screwed into the crank-case (see engine manual).
- Before loosening the cap, take a one-liter container.
- Let the engine completely drain of its oil (+/- 0.75 l).
- Screw the drain plug back onto the oil drain port Wipe off any traces of oil with a clean cloth.
- Refill the engine with new oil recommended by the engine manufacturer. For this purpose, ELIET recommends a high-quality oil with a high level of detergent: SUNOCO DENALUBE SAE 20W50 API SF / CC.
- Pour about 0.75 l of oil into the filling hole. Then wipe off any oil stains. Allow the oil time to drain completely into the crankcase before measuring the level with the dipstick.
- Insert the dipstick into the filler port without screwing it back on. Take it out and check if the oil reaches the maximum mark. If this is not the case, top up the oil.



Warning: A lack of oil causes irreparable damage to the engine.

11.5.2 Checking or replacing the spark plug

ELIET offers the following spark plugs:

6 HP Honda GP200 – 6.5 HP HONDA GX200	NGK BPR 6 ES
6,5HP Vanguard 200	CHAMPION QC 92 YC or RC 12 YC

- Turn off the engine and remove the spark plug cap.
- Clean the engine area around the spark plug and remove it from the engine.
- Use a thickness gauge to check that the distance between the electrodes is 0.8 mm.
- The spark plug should be replaced when it is heavily dirty.



To check the quality of the ignition, follow these steps:

1. Replace the spark plug on its cap.
2. Place the cap with the spark plug so that the electrodes or the spark plug thread are in contact with the motor ground.
3. Pull the launcher handle.
4. Observe if there are sparks between the electrodes of the spark plug.
5. If this is indeed the case, and these sparks are clear and well centered between the electrodes, the spark plug is still functional.
6. If the sparks are weak, irregular, and only shoot intermittently between the electrodes, the spark plug is likely deteriorated and needs to be replaced.



Caution: The replacement of the spark plug or its replacement with a new one must be carried out with the utmost care, so that the thread in the engine is not damaged. Tighten the spark plug to a torque of 20 Nm.

11.5.3 Air Filter Replacement

- This is completely identical to cleaning the air filter (see Section 11.4.3, Cleaning the Air Filter).
- A suitable new air filter is available from your ELIET distributor or from an approved distributor of the engine manufacturer.

11.5.4 General lubrication

ELIET believes that it is important to use high-quality products, as they extend the life of machines that are sometimes called upon to work in extreme conditions. For example, special lubricants have already been used in the manufacture of the machine. ELIET also recommends regular lubrication of bearings and various hinge points.



Caution: As with all maintenance tasks, the engine must be stopped, and the spark plug cap disconnected. Gloves are mandatory, note that the blades are extremely sharp and likely to cause cuts.

A. Bearing lubrication

- Unscrew the clamping knob and open the access door to the grinding chamber.
- Spray a little molybdenum disulfide (MoS2) penetrating oil on the bearings of the blade shaft and let it work.
- Remove any clumped dirt around the bearing seals with a cloth.

- Inject more penetrating oil into the bearing seals so that it penetrates to the bearings.
- Any excessive amount should be wiped off.
- Then spray grease (e.g. Novatio White Supreme Grease) into the bearing seals and wipe off any residual excess on the walls with a cloth.
- In addition, if desired, you can also spray penetrating oil on the entire blade shaft . MoS2-based penetrating oil dissolves rust, such handling cannot be detrimental.

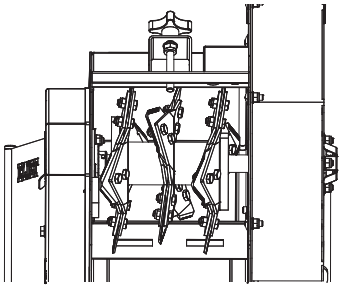

B. Lubrication of the points of articulation

Hinge points are defined as : the hinge point of the emergency stop lever, the hinge point of the foot and the hinge points of the anti-spray deflector located in the loading hopper, the knob of the access door to the grinding chamber, the pins supporting the transport wheels, the hinge of the discharge nozzle and its deflector valve.

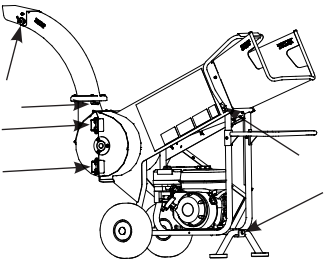

- Graphite oil should first be injected. Leave the product on for a few minutes.
- Then wipe off any residual lubricant and any dirt with a cloth. When the hinge points are clean, spray grease (e.g. Novatio White Supreme Grease) should be injected into the hinge joints.

All the lubricants listed are available from your ELIET dealer ; To find your nearest dealer, visit www.eliet.eu.

11.5.5 Adjusting the belt tension



Attention: The motor should always be stopped and the spark plug cap disconnected while adjusting the belt tension.

- To adjust the belt tension, the internal protective guard must first be disassembled. To do this, unscrew the four M6 screws. Next, disassemble the external protective housing from the chassis by unscrewing the M6 bolt at the bottom of the housing and the M8 side bolt at the front of the hood. To do this, you need two 10 mm wrenches and one 13 mm wrenches.

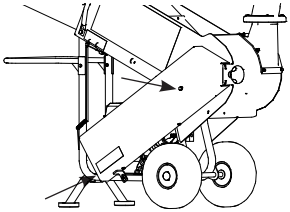

A. Measuring tension using a weight:

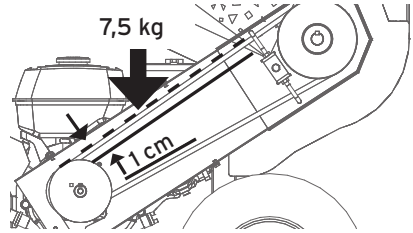

- To measure the exact belt tension, a 7.5 kg weight must be suspended from the top of the belt, halfway between the two transmission pulleys. If under this weight, the belt collapses by 1 cm, the tension of the belt is the right one (see figure).
- The belt is tensioned by pushing the engine block towards the rear of the chassis.
- Beforehand, loosen the four M8 bolts on the foot of the motor (2x 13mm wrench) and loosen the tension screw (M10) located at the back of the chassis (17mm wrench).
- Push the engine back using the bolt (M10) on the front of the engine block, after loosening the locking lock nut. Before loosening the engine, mark the chassis plate on the sides of the engine block. This will save you time when aligning the pulleys later.
- Once the proper belt tension has been obtained, straighten the position of the motor by acting on the M 10 rear pressure screw (17 mm wrench). Use marker cues.
- The alignment of the two pulleys can now be fine-tuned by tightening the rear pressure screw of the motor forward. Attach a straight metal ruler to check the absence of light between it and the pulleys. The pulleys are well aligned when the metal ruler placed against the pulleys touches the 4 points indicated (see figure).

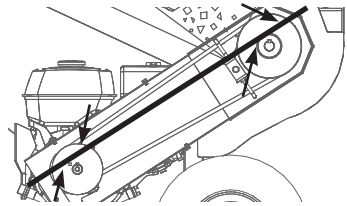

- Once this tension adjustment has been made, tighten the lock nuts of the two M10 pressure screws to lock them.

B. Measuring the tightening using a measuring tool

Principle of measuring the tension of a belt:

To measure the tension of a belt, the force required is determined by pressing on the back of the belt halfway between the two pulleys, and over a certain stroke.

This strength depends on the type of belt, the diameter of the pulleys and the distance between the two pulleys.

To measure the belt tension, use a measuring gauge (part number BG 180 100 100).

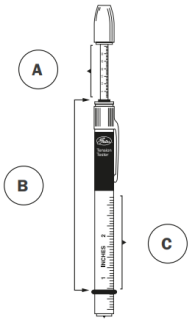

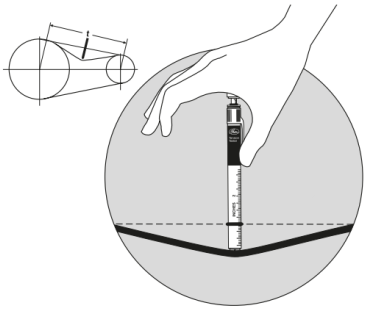

A. Scale for measuring deflection force
B. Rubber Rings
C. Deflection distance measurement scale

This tool has two scales: the scale on the fixed part indicates the deviation, the scale on the moving part indicates the strength.

Determine the centre between the two points of contact of the belt with the pulleys and make a mark with a felt pen at this point.

- Place a straight batten against the outer circumference of the two pulleys so that it is in contact with the belt along its entire length.
- Slide the rubber ring (1) on the scale of the fixed part (deflection distance) of the gauge at 10 mm.
- Slide the small rubber ring (2) over the gauge of the moving part (Deflection Force) until it touches the fixed part.
- Now place the measuring gauge with the fixed part on the back of the belt where you made the mark. As you do so, place the gauge perpendicular to the belt.
- Now press the rubber end of the moving part of the gauge in the direction of the belt. Under the effect of the force exerted, the belt bends. The extent of the deviation is easy to see in relation to the straight bar which indicates the initial situation. Press down until the ring (2) is flush with the bottom of the slat.

Note : Do not press beyond this point.

- By pressing the gauge, the moving part also moved into the fixed part, causing the small ring (2) to move on the ladder. When the gauge is removed from the belt, the applied pressure force can be read at the point where the small ring 2 is on the scale.

• This indication must be 70 N. If the force is too low, the belt must be tensioned.

GOOD TENSION + GOOD ALIGNMENT = LONG BELT LIFE

- After setting the required tension and alignment, the motor can be reattached by firmly tightening the four motor bolts (M8) (2x 13mm wrenches).
- Only as a final check, after a final check, can the protective housings be put back in their original position.

11.5.6 Turning and replacing the shredder blades

If the blades are regularly sharpened, ELIET guarantees more than 50 hours of service per side. As soon as the cutting edges are worn, the blades can be turned over. The new cutting edge can in turn be used for 50 hours. When both sides are worn, the blades must be replaced.

Caution: All applicable warranties will be null and void in the event of damage and damage resulting from improper maintenance of the blades. If necessary, consult your authorized ELIET distributor for advice.

Caution: There is a positioning of the blades to be observed when replacing or turning the blades (see § 11.5.6, Turning the blades).

Rules for positioning the blades on the rotor :

Each blade has a sharp side (A) and a ridged side (B).
(See illustration on the right).

The positioning ruler is the same for the 3 knife holders

Ruler for positioning the "straight" blades (perpendicular to the cutting rotor) on each knife holder: One blade facing the sharp face (A) to the right and the 2nd blade facing the edge (A) to the left.

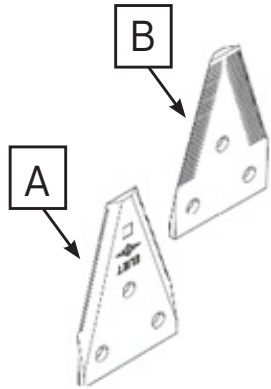

Positioning rule for other blades :

The blades facing left (view facing the cutting rotor) should be positioned with the sharp side (A) facing right.

Right-facing blades (view facing the cutting rotor) must be positioned with the sharp side (A) to the left.

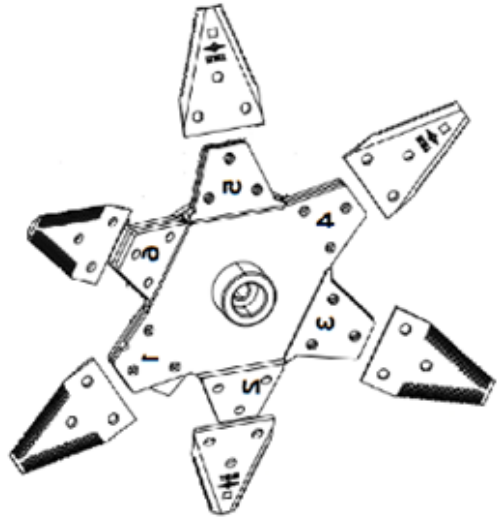

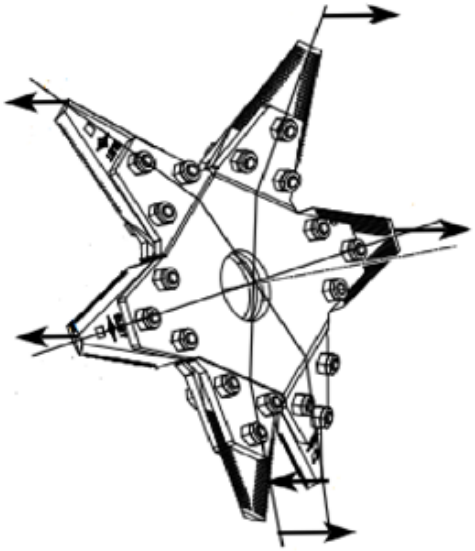

11.5.7 How to turn blades

Warning: Caution is advised! Gloves are necessary, as the blades are very sharp!

- For safety, disconnect the spark plug cable.
- As with blade sharpening, the machine can be tilted on its support foot and resting on the carrying handle, but is not absolutely necessary. Beware of possible fuel leaks from the fuel cap. In this position, please pay attention to the shredding chamber access door being held open and not at risk of closing on its own.

For information: Disassemble, turn and reassemble the blades one by one so that you don't get the wrong position. In order not to make a mistake, it is better to proceed blade by blade.

- The blade replacement can also be carried out with the machine resting horizontally on its wheels and foot, and the operator sitting on a chair.
- Open the access door to the grinding chamber by unscrewing the closing knob. The shredding chamber is therefore easy and completely accessible.
- The cutting rotor consists of 3 disc holders, each accommodating 6 knives. When you look at the cutting rotor from the front (seen from the outside after opening the access door to the grinding chamber), you will see that each knife disc holder contains 2 knives positioned perpendicular to the axis, 2 knives facing right and 2 knives facing left.
- In order not to make the wrong position, the best thing to do is to reverse 2 knives in opposite positions; Make landmarks using a marker. Disassemble 2 knives with sharp (bevelled) sides facing opposite sides and reverse them so that you can use the cutting edge not yet used.

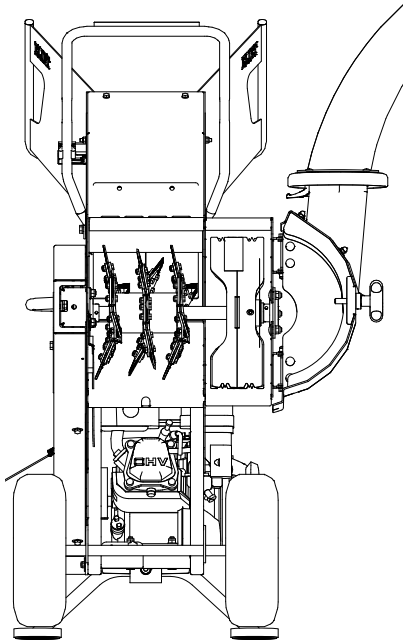

- To disassemble them, loosen and remove the three bolts (M6) that secure each blade. If they are damaged, replace the bolts with new ones. The blades should be removed from the supports preferably using a grip pliers.
- After reversing 2 position knives, replace the knife attachment bolts (M6), making sure that the screws are inserted from the right and the nuts from the left (view from the outside, facing the cutting rotor). Tighten them to the required torque (10 Nm).
- Do not turn knives on themselves.
- Then do the same for all the other knives in the rotor, making sure to respect the initial positioning of the knives.



Warning: Improper positioning of the knives can impact the homogeneity of the grinding and can cause premature wear of the cutting rotor support bearings.



Warning: Improper assembly will cause the knife bolts to loosen and an obvious risk of mechanical breakage with considerable damage, and personal injury if debris is thrown out of the machine.



For information: Improper installation of the knives and mounting bolts will irrevocably result in the loss of the warranty.

11.5.8 Steps to Replace Blades

Please consult your ELIET distributor for the purchase of a new blade assembly quoting the following reference number : BU 401 100 103.



Warning: Gloves are necessary, as the blades are very sharp!

- When replacing the blades, the bolts and nuts that secure them should also be replaced as a matter of course.
- After disassembling the blades, first remove the dirt that has accumulated between the two halves of the knife support plates before reassembling the new blades. For example, use a painter's knife to do this.
- When reassembling the blades, do not forget to tighten the bolts vigorously. It is strongly recommended to check all bolt tightening's before closing the access door to the grinding chamber.
- Be sure to replace the bolts in the blade holders, **i.e. the screws on the right side and the nuts on the left side (view facing the cutting rotor)**. The correct positioning of the bolts will ensure that the blades do not loosen or come loose .
- At the first work session following a blade change, give the new blades time to "stabilize". This means that the blades will take their final place, which results in the slight loosening of some blades between the blade support plates. **During the first 5 hours of operation, you will have to tighten the bolts of the blades again. (Tightening torque: 10 Nm)**



Careful: Improper mounting of the blades can cause the machine to break or damage it. The operator and people in the environment near the work area are also at risk of injury.



Careful: After replacing the blades, never forget to check all bolt tightening during the first 5 hours of operation. Failure to comply with this obligation could have serious consequences for the operator and the machine.

12. Machine Storage



Preparing for storage:

- Clean the machine (see § 11.3 Cleaning the machine).
- Perform extensive maintenance (see § 11.5 Maintenance after 20 hours of operation).
- Check that all bolts and nuts on the machine are properly tightened and tighten if necessary. To check most bolts, always take two 10, 13, and 17 wrenches as well as 4, 5, and 6 Allen wrenches.
- Empty the gas tank. You can do this simply by running the machine until it runs out of fuel. If necessary, use a siphon pump to put the petrol back into a jerry can (see the safety instructions in §9.2 Fuel top-up).
- Disconnect the spark plug cap (see §11.5.2 Checking or replacing the spark plug). Spray MoS2-based graphite oil through the spark plug hole into the combustion chamber. Pull the handle of the launcher until the piston is in the up position. Then replace the spark plug.
- Touch up or grease the areas where the paint has popped, to prevent rusting. You can obtain the original paint in the same shade from your ELIET distributor.
- Always give the motor time to cool down before storing the machine.
- If the machine is stored outside, it must be well protected by a tarpaulin. Avoid exposing the machine directly to the elements. In any case, ELIET strongly recommends a protected storage location.
- Place the machine out of the reach of children.
- Never place the machine in the direct vicinity of a heat source or a live flame (at least 2 m away).

13. Technical sheet



Engine choice	Electrical 380V 4500W Honda GP 200 6,0 hp B&S Vanguard 6,5 hp Honda GX200 6,5 hp
Capacity	50 mm
Yield (wheelbarrows of waste/hour)	16
Blade shaft	Steel shaft diameter 25mm
Blades	18 HS steel (reversible) 3 double steel blade discs
Shredding technology	Axe principle ELIET™
Number of axe blows/min	45.000
Feed opening	190 x 250mm
Feed height	930 mm
Blowing height	1330 mm
Wheels (Ø x R / material)	Tires 4.00 x 4
Working Position Dimensions (LxWxH)	1510 x 490 x 1330 mm
Transmission	V-BELT Gates Guard Power SPA/XPA 1600
Chassis	Steel sheet 2,5 - 3 mm
Sound power Lw(A)	110 dB(A)
Weight	92 kg
Options	-

14. EC Declaration of Conformity

Machine: VEGETABLE SHREDDER

Model: ELIET MINOR

Type: MA 002 013 922
MA 002 013 231
MA 002 013 132
MA 002 013 206

This machine has been designed and built in accordance with the following standards:

EN 13683 : Gardening Equipment – Internal Combustion Engine Shredders/Shredders – Safety

The machine manufacturer ELIET states that it has carried out a risk analysis, attesting to knowledge of the risks and dangers of the machine. In this knowledge, the necessary measures have been taken in accordance with Directive 2006/42/EC in order to ensure – in the context of proper use – the safety of the user.

The measured and guaranteed sound level value was obtained by applying the procedures of the European Directive 2000/14/EC, Annex III/B 50 and is based on certain specifications of the EN 13683 standard.

Measured sound level: 110 dB(A) Guaranteed acoustic level: 111 dB(A)

Date: 01/01/2023
Signature:

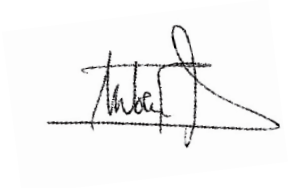

Frederic LIETAER
CEO of ELIET EUROPE SA
Born 02/01/1975

ELIET EUROPE SA
Diesveldstraat 2 B - 8553 Otegem BELGIUM
Tél : +32 56 77 70 88
Mail : info@eliet.be

15. Annexes:

15.1 Assemble the machine

POS	PART NR.	DESCRIPTION	QTY
1	BQ 341 015 100	BAG OF PARTS 100*150	1
2	BZ 201 032 201	MINOR 4S - ASSEMBLY DRAW	1
3	BS 554 100 625	SCREW M6*25 DIN 603	4
4	MPA 01 530 430	PLATE EJECTION NOZZLE	2
5	BR 111 060 690	NYLON RING 6/10*6	3
6	BS 532 006 224	WASHER M6*22*2 DIN 440	3
7	BS 502 000 600	NYLON NUT M6 DIN 985	8
8	BS 531 000 300	WASHER M6 DIN 125	7
9	BB 011 000 200	STARLOCK 20MM	2
10	BS 502 001 000	NYLON NUT M10 DIN 985	1
11	BS 531 001 000	WASHER M10 DIN 125	2
12	BS 511 001 042	SCREW M10*150 DIN 931	1
13	BS 511 000 640	SCREW M6*40 DIN 931	2
14	BR 000 910 160	U-PROFILE 16 CM	1
15	BS 554 100 630	SCREW M6*30 DIN 603	3
16	BN 530 106 630	ADJUSTABLE HANDLE	1
17	MPA 01 530 700	EJECTION NOZZLE ROTATION LIMITER	1

Tools needed:

- 2 x 10mm wrenches
- 2 x 13mm wrenches
- 2 x 17mm wrenches

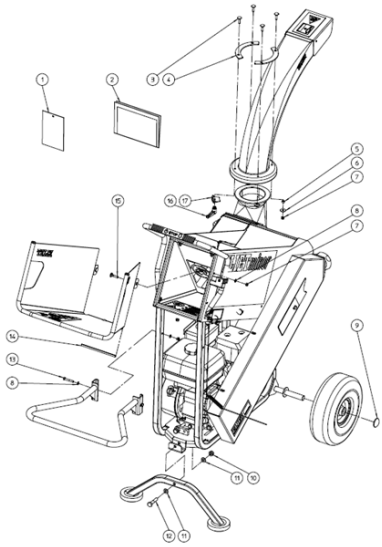

15.2 Assemble/orientation of the discharge chute

The base of the chip evacuation nozzle is equipped with safety lugs to prevent it from rotating in the direction of the operator. To ensure that it works perfectly, please ensure that this nozzle is assembled as shown on the view on page 52.

To change the orientation of the chip discharge nozzle, loosen the adjustable clamping handle (position 16) by about 1 full turn and then orient the nozzle in the desired direction. This clamping handle is equipped with a "back-and-forth" notching system that can be operated by pressing the red button, after having made a tightening or loosening movement and encountered an obstacle, it is necessary to press this red button in order to allow the handle to turn empty and return to its initial position, and therefore to regain travel on the thread.

As soon as the desired nozzle orientation is reached, tighten the handle firmly to lock it and prevent unwanted rotation.

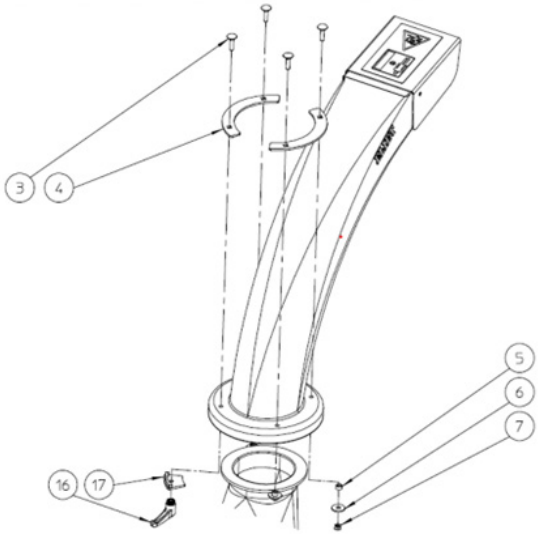

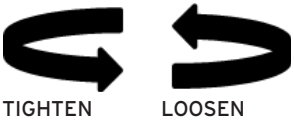

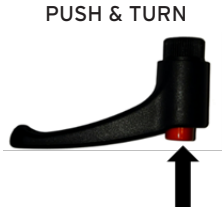

Caution: Please ensure proper assembly of the nozzle rotation limiting guide (position 17) to prevent the nozzle from rotating in the direction of the operator.

15.3 List of tightening torques

Bolt head according to DIN 931,912.

Power	Threading	8.8	10.9
Normal thread	M4	3,0	4,4
	M5	5,9	8,7
	M6	10	15
	M8	25	36
	M10	49	72
	M12	85	125
	M14	135	200
	M16	210	310
	M18	300	430
	M20	425	610
	M22	580	820
	M24	730	1050
	M27	1100	1550
	M30	1450	2100
Fine thread	M8 x 1	27	39
	M10 x 1,25	52	76
	M12 x 1,5	89	130
	M14 x 1,5	145	215
	M16 x 1,5	225	330
	M18 x 1,5	340	485
	M20 x 1,5	475	680
	M22 x 1,5	630	900
	M24 x 2	800	1150
	M27 x 2	1150	1650
	M30 x 2	1650	2350

(With friction factor μ = 0,14)

15.4 Risk analysis

Below is a list of hazards and risks associated with storing, transporting or operating the shredder. Take note of these hazards and avoid these hazards by following the instructions in this manual. Be aware that not only the user is at risk, but that third parties may also be at risk. Be sure to keep third parties at bay.

- Injury to the hands while passing through the entrance opening and going beyond the projection shields.
- Injury due to chip flying through the feed opening when pressing the splash shields.
- Risk of serious injury or death due to the detachment of a machine part (knife, bolts, etc.) as a result of a lack of inspection and maintenance, or after incorrect intervention.
- Risk of injury from projection through the feed opening or drain nozzle after the introduction of a foreign object (stone, metal, textile, plastic, etc.).
- Injury by flying chips to the discharge nozzle during the operation of a machine in operation.
- Injury or cut to the hands as a result of opening the shredding chamber when the blade shaft has not yet come to a stop.
- Injury or cut to the hands as a result of the dismantling of the blade shaft.
- Injury or cut to the hands as a result of a fall from a dismantled blade shaft.
- Strangulation due to the catching of a scarf, or loose garment in the machine.
- Injury due to machine tipping over during careless transport.
- Fire hazard due to wood chips and residues clogging the engine's cooling air channels.
- Irritation of the respiratory tract or lung problems due to inhalation of the dust released.
- Hearing impairment caused by insufficient ear protection during work.
- Bruises or injuries when introducing hard or very dry materials, caused by the force exerted by the blades on the wood.
- Bruises or injuries due to the kick-back of the wood when introduced through the funnel.
- Nervous system disorders or rheumatic conditions following a long grinding session without taking breaks. Joint pain resulting from vibrations caused by a continuous supply of large branches.
- Injury due to contact with the blades or the evacuation propeller during unclogging, unblocking, maintenance or cleaning.
- Injury due to a fall while transporting on a floor that cannot support the weight of the person and the machine.

This list is not exhaustive and is provided for information purposes only, for the benefit of user safety.

15.5 Warranty conditions

Dear Customer,

Thank you for purchasing an ELIET product. We congratulate you on your choice of machine and have no doubt that it will far exceed your expectations in the years to come. At ELIET, we are committed to ensuring that our products work properly. That's why you benefit from the ELIET warranty of 2 years after purchase.

What is the warranty?

The design and manufacturing procedures of ELIET products are subject to strict quality guidelines. The purpose of these is to guarantee the longevity and permanent safety of the product. To this end, ELIET will repair all defects or anomalies free of charge during the entire running-in period (warranty period) as long as the prescribed procedure is followed.

Warranty conditions

ELIET's warranty obligation on new machines is governed by the following terms and conditions:

Warranty Period

The warranty period begins on the date the dealer delivers the machine to the customer and ends:

- after two years of private use.
- after twelve months or 100 hours of rental use.
- after twelve months or 100 hours of semi-professional or professional use.

What are the cases excluded from the warranty ?

- Wear parts are not covered by the warranty conditions (e.g. blades, bearings, belts, chains, sprockets, tires, warning lights, fuses, etc.).
- Failures that turn out to have been caused by improper use, negligence or an external factor (drop, chips, foreign objects, accident).
- Failure that is the result of a lack of maintenance of the machine in accordance with the recommended periodic maintenance schedule.
- A breakdown occurring after maintenance and/or after the use of non-ELIET spare parts .
- A failure resulting from the unauthorized modification of the original design of the machine.
- A failure resulting from operation of the machine not in accordance with the instructions specified in this manual.
- When the prescribed warranty procedure has not been followed or when the warranty period has expired.
- For any engine-related problems, contact a service centre of the engine brand approved by the machine manufacturer.

15.5.1 Procedure

- **Step 1:** After the purchase, the customer will proceed to the online registration of his purchase by completing the registration form on www.eliet.eu or by returning the handwritten registration card to ELIET. The customer will keep the purchase invoice until the warranty expires.
- **Step 2:** When a breakdown occurs, the customer must have his machine checked by his authorized ELIET distributor. If the latter considers that it is a manufacturing defect, he can claim the warranty under the specified conditions.
- **Step 3:** Any warranty claim will be accompanied by a duly completed official claim form. Distributors can obtain these forms from ELIET or an ELIET importer/agent, or complete a warranty claim online via their dealer area.
- **Step 4:** The distributor orders the spare parts necessary to carry out the repair. The distributor then forwards the purchase order along with the completed warranty form and a copy/proof of registration.
- **Step 5:** The warranty form must be attached to the purchase invoice and sent to ELIET or the ELIET importer/agent.
- **Step 6:** ELIET will ship the ordered parts to the distributor under normal delivery and payment conditions.
- **Step 7:** ELIET's after-sales service will examine the defective components before accepting or rejecting any warranty service request. ELIET reserves the right to decide whether the customer has complied with the conditions governing the validity of this one - or two year warranty period. Defective components will be returned to ELIET and will become its property.
- **Step 8:** If the warranty intervention request is deemed to be justified, ELIET will credit the parts delivered under warranty. The cost of labour is not covered by ELIET.

15.5.2 In case of damage during transport

- All goods are deemed to be sold ex works. The risks associated with transport are entirely borne by the reseller customer. ELIET therefore strongly advises the reseller customer to examine the goods at the time of receipt.
- Damage must be reported on the delivery note before signing. Make sure that the carrier's driver signs this damage statement on your copy of the delivery note.
- The insurance company will not be liable without such written statement signed on the delivery note.
- Damages may be sought from the carrier based on a copy of the delivery note and a cover letter detailing your claim.
- The machine must be kept in its original condition until it is examined by the carrier's insurer .

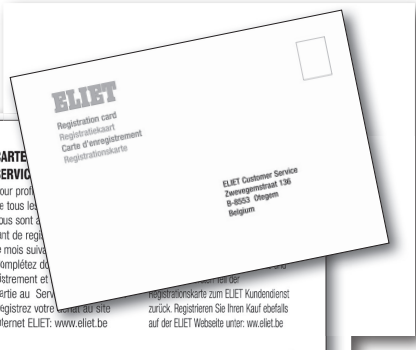

REGISTRATIONCARD ELIET CUSTOMER SERVICE

To be able to claim the full rights to which you are entitled, it is important to register within a month after the date of purchase. Therefore fill out this registration-form and return the first registra-tioncard to the ELIET Customer Service. Your purchase should be registered on the ELIET website: www.eliet.be

REGISTRATIEKAART ELIET KLANTENDIENST

Om als klant, aanspraak te kun-nen maken op waarborg dient men zich binnen de maand na aankoop bij ELIET te registreren. Hiervoor vult u onderstaand docu-ment volledig in en stuurt het eer-ste deel van deze registratiekaart naar de ELIET klantendienst terug. Registreer uw aankoop op de ELIET website: www.eliet.be

CARTE SERVIC

Pour prof
de tous le
vous sont
tant de reg
le mois suiva
Complétez d
gistrement et
partie au Serv
Registrez votre
Internet ELIET: www.eliet.be

registrationskarte zum ELIET Kundendienst zurück. Registrieren Sie Ihren Kauf ebefalls auf der ELIET Webseite unter: ww.eliet.be

Customer Identity / Klantgegevens / Données du Client / Kundendaten

Name / Naam / Nom / Name

First Name / Voornaam / Prénom / Vorname

Street / Straat / Rue / Strasse

Nr / Nr / N° / Nr

Box / Bus / Boîte / App.

City code / Postnr / Code Postal / Postleitzahl

City / Plaats / Ville / Stadt

Country / Land / Pays / Land

Telephone / Telefoon /Téléphone / Telefon-Nr.

Fax / Fax / Télécopieur / Fax

E-mail

Machine identity / Machinegegevens / Données de machine / Daten Maschine

Model / Model / Modèle / Modell

Year of manufacture / Bouwjaar / L'année de construction / Baujahr

Article Code / Artikel code / Code d'article / Artikel-Nr.

Serialnumber / Serienummer / Numéro de série / Serien-Nr

Date / Datum / Date / Datum

Signature
Handtekening
Signature
Unterschrift

Stamp of dealer
Stempel van handelaar
Cachet de revendeur
Stempel Fachhändler

I declare that all information that was filled in is correct and truthful. I also declare to have read and understood the operations manual and the warranty conditions.
Ik verklaar dat al deze gegevens waarheidsgetrouw werden ingevuld.Hierdoor geef ik te kennen de garantievoorwaarden en handleiding te hebben gelezen en begrepen.
Je déclare que tous les données complétées sont correctes et véridiques. Je déclare également d'avoir lu et compris les notices du mode d'emploi et les conditions de garantie.
Ich erkläre hiermit, dass alle angegebenen Daten korrekt und warheitsgemäss gemacht wurden. Ich erkläre ebenso, dass ich die Garantiebedingungen gelesen und verstanden habe.

Put a crossmark to which application this machine was used
Zet een kruis bij de toepassing waarbij deze machine wordt ingezet
Indiquez avec une croix l'environnement dans lequel la machine a été utilisée.
Kreuzen Sie an, für welche Art von Gebrauch die Maschine bestimmt ist.

- ☐ Home use / Particulier gebruik / Usage particulier / Private Nutzung
- ☐ Profesional Landscaping / Hoverniersbedrijf / Usage Professionel / Gewerbliche Nutzung
- ☐ Forestry / Bosbouw / Forêt / Forstbetrieb
- ☐ Public Groudscare/ Openbare groenvoorziening / Espaces Verts Public / Öffentliche Grünflächenversorgung
- ☐ Rental / Verhuur / Location / Vermietung

Dit document dient binnen de maand na aankoop teruggestuurd te worden naar de ELIET Klantendienst.
This document has to be returned to ELIET Customer Service within a month after purchase.
Renvoyez ce document au Service après-vente ELIET dans le mois suivant à la date d' achat.
Dieses Dokument muss innerhalb eines Monats nach Kaufdatum an den ELIET Kundendienst zurückgeschickt werden.

SPECIMEN

BZ 201 030 003