ELIET®

MANUAL

Major 4S



In this manual, you will find information regarding the use and maintenance of the machine.
Read it carefully and keep it in a safe place.



Please also keep your **purchase invoice** or proof of payment with this manual.



Register your purchase online at **www.elietmachines.com**



Caution
When commissioning a new machine, it is imperative to check that all the blade bolts are tight before the first five hours of operation. If not, one or more blades may come off. This can cause serious consequential damage to your new machine and result in serious injury or even death to the operator. ELIET is not liable for the consequences of such negligence, which also means that you will lose all warranty claims.

© ELIET
Copyright 2023 ELIET. All rights reserved. All texts, drawings, illustrations, diagrams, graphics, etc. in this ELIET manual are protected by copyright and other intellectual property rights. None of this information may be copied for commercial purposes or broadcast and/or modified or reposted for other purposes. Content whose copyright belongs exclusively to its respective owners has been included in some places in this ELIET manual.

1. Introduction



1.1. Please read the instruction manual carefully

ELIET machines are designed for safe and reliable use, if they are operated in accordance with the instructions provided. Carefully read these operating instructions before using the machine. Failure to do so may result in personal injury or damage to the equipment.

1.2. Identification data – ELIET MAJOR 4S

Write the identification data of your machine in the boxed areas:

Article number:	MA
Serial number:	
Year of Manufacture:	20

2. Warranty



2.1. Warranty card

Please mail the completed warranty card within one month of the date of purchase to the address stated below:
ELIET EUROPE NV, Diesveldstraat 2, B - 8553 Otegem (Belgium)
Tel. +32 56 77 70 88 - Fax +32 56 77 52 13

OR ALSO REGISTER YOUR PURCHASE ONLINE AT WWW.ELIETMACHINES.COM
Read the warranty conditions **on the attached warranty card** in § B5. on page 56



For your information:
Any technical problem or breakage resulting from the improper maintenance of the machine will void any warranty claims. Chapter 11 provides a summary of the maintenance intervals and indicates for which maintenance an authorised dealer should be consulted.

3. Welcome



Welcome to the ELIET customer community.

We would like to thank you for the confidence that you have placed in ELIET and we are convinced that you have purchased the very best machine. The operating life of your ELIET machine will depend on how you care for your machine. If you follow the instructions and suggestions in these manuals, your ELIET machine will operate in optimal condition for a very long time.

We strongly recommend that you carefully read this user manual. This will prevent any incorrect operation of the machine that might have serious consequences. It is also in your best interest to carefully read the chapter specific to safety instructions. Even if you are thoroughly familiar with operating this type of machine, it is still strongly recommended that you carefully read this user manual.

At ELIET all our machines and devices are subjected to a policy of continuous change and therefore, the specification of your machine may differ slightly in terms of shape, technology and accessories. The descriptions and technical data in this manual are accurate at the time of printing. Certain illustrations and descriptions may not be applicable to your specific machine, but instead relate to a different version of the machine. **In turn, we trust that you will understand that the texts and illustrations in this manual cannot lead to any claims**. If you still have questions after having read this notice, please do not hesitate to contact your ELIET dealer. Find your nearest distributor at www.elietmachines.com.

3.1. ELIET AT YOUR SERVICE

During office hours, the ELIET helpdesk is always at your service to answer your questions.

European customers	American customers
GMT +1: 8am to 12pm & 1pm to 5pm (4pm VE)	Ph (+001) 412 367 5185
Tel: +32 56 77 70 88	Fax (+001) 412 774 1970
Fax: +32 56 77 52 13	usinfo@elietusa.com
Service@eliet.be	www.elietusa.com

4. Warning



OPERATING FORESTRY, PARK AND GARDEN POWER EQUIPMENT

Under the laws of several countries and states, it is unlawful to operate an internal combustion engine that uses hydrocarbon fuels on any forest-covered, brush-covered or grass-covered land or on land where grain, hay or any other flammable agricultural crop is grown without a properly functioning spark arrestor.

Like with most outdoor power equipment, the engine in your power equipment is an internal combustion engine that burns petrol, a hydrocarbon fuel. Therefore, your power equipment must be equipped with a spark arrestor muffler that is in continuous, effective working order. The spark arrestor must be attached to the engine exhaust system in such a way that flames are prevented from escaping the system and from coming into contact with flammable material.

Failure on the part of the owner/operator of the machine to comply with this regulation is a misdemeanour under certain law (e.g. Californian Law), and may also be a violation of other national and/or federal regulations, laws, ordinances, or codes. Contact your local chief fire officer or forest ranger for specific information about the applicable regulations in your area.

The standard muffler installed on ELIET machine engines is not equipped with a spark arrestor. One must be added before operation if the machine is to be used in an area where a spark arrestor is required by law. Please contact your local authorities to find out if these laws apply to you. Please contact your authorised dealer to learn more about the spark arrestor options that are available to you.

5. Table of Contents

1. Introduction. 4
1.1. Please read the instruction manual carefully 4
1.2. Identification data – ELIET MAJOR 4S 4
2. Warranty 4
2.1. Warranty card 4
3. Welcome 5
3.1. ELIET AT YOUR SERVICE 5
4. Warning 6
5. Table of Contents 7
6. Safety symbols 8
6.1. For your information 8
6.2. Caution 8
6.3. Warning 8
7. Main parts 9
7.1. General presentation 9
7.2. Engines 10
8. Safety regulations. 12
8.1. Safety messages 12
8.2. Safety features 16
8.3. Safety regulations 17
9. Dealer's obligations. 21
10. Operating instructions 24
10.1. Preliminary checks 24
10.2. Adding fuel 25
10.3. Preparing the work area 26
10.4. Engine starting system 26
10.5. Stopping the engine 28
10.6. Working with the machine 29
11. Transporting the machine 32
12. Maintenance 34
12.1. General 34
12.2. Maintenance diagrams 35
12.3. Cleaning the machine 37
12.4. Routine checks before each work session 39
12.5. Maintenance after 20 hours of work 44
13. Storing the machine 54
14. Equipment specifications 55
15. EC Declaration of Conformity. 56
16. Annexes 57
16.1. A1 Assemble the machine 57
16.2. A2 Assembling/orienting the discharge tarpaulin 59
16.3. A3 Major 4S PTO version 60
16.4. A4 List of tightening torques 62
16.5. A5 Risk analysis 63
16.6. A6 Warranty conditions 64

6. Safety symbols

ELIET cannot foresee every situation which may constitute a risk or danger. As such, the warnings in this notice and the stickers on the machine are not exhaustive (complete). Though very minimal, there is some risk. If you, as the operator, utilise any procedure, action or technique that is not explicitly recommended by ELIET, please ensure that you are not putting anyone else at risk.







Certain symbols in this manual ("For your information", "Caution", "Warning") are used to provide additional information and to draw your attention to potential risks.

6.1. For your information



For your information:
This symbol is used to draw your attention to specific information and/or actions, or to denote where you can find additional information relating to the subject.

6.2. Caution



Caution:
This notice identifies safe usage habits. This will allow you to avoid any incorrect actions that could lead to bodily injury or material damage.

6.3. Warning



Warning:
This notice is used to warn you about extreme danger that you must be aware of in these specific circumstances. So remain alert, in order to maintain your own safety.

These security messages are only meant to inform the operator; in no way do they eliminate risk. Common sense and following the instructions provided in this manual are essential to avoiding accidents.

7. Main parts

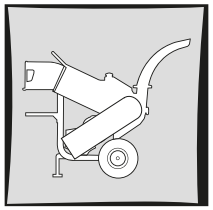

To fully understand the content of this operator's manual, you need to be fully conversant with the terminology used in the descriptions. This chapter includes a rundown of various parts and identifies them by name. It is highly recommended that you become familiar with the machine so that you understand the explanations in this user manual.

7.1. General presentation

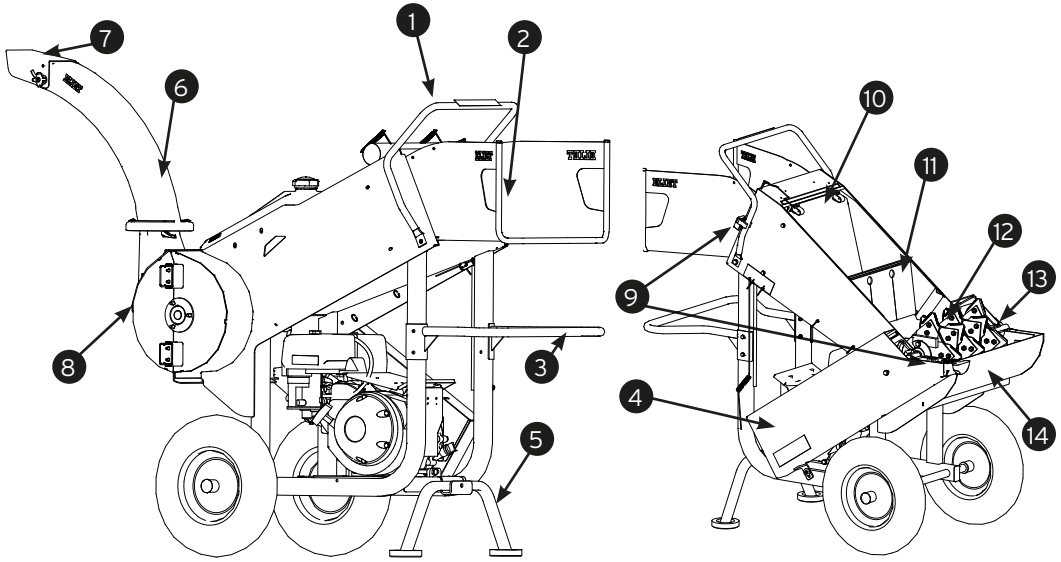

1) Safety-stop lever
2) Feed hopper
3) Handle
4) Protective cover V-belt
5) Stabilising foot
6) Blow chute
7) Deflector flap
8) Turbine blower
9) Safety switch
10) Anti-projection screen
11) Anti-projection flap
12) Shredding chamber with rotor
13) Propeller
14) Access door to the shredding chamber

7.2. Engines

9 CH HONDA GX270

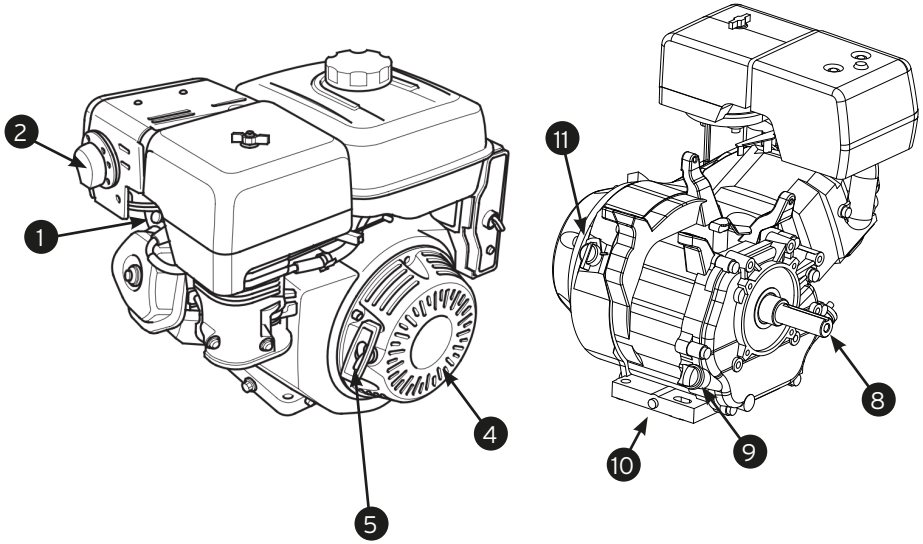

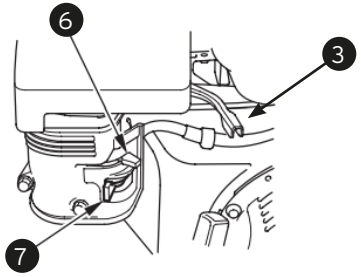

1. Spark plug
2. Exhaust
3. Throttle lever
4. Starter lever
5. Starter handle
6. Choke lever
7. Fuel inlet valve
8. Engine shaft
9. Oil filler cap/dipstick
10. Oil drain plug
11. Engine stop switch



For your information:
When we use the terms front, back, left and right in the instruction manual, we are referring to the position seen from the point of view of the operator standing in front of the machine and looking down the feed hopper.

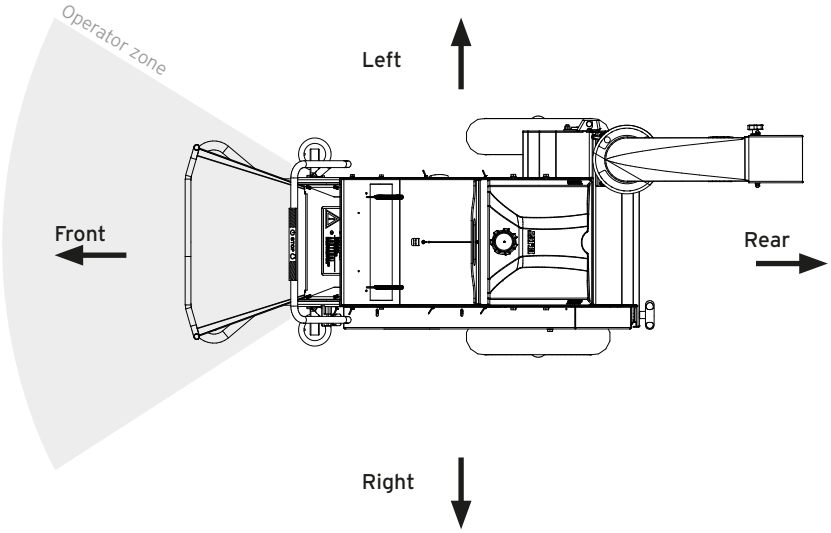



For your information:
Your ELIET dealer is at your service, ready to provide you with maintenance or advice so that your ELIET machine always remains in optimal condition. You can also contact your dealer with all of your parts and lubricant needs. These service parts are manufactured to the same stringent accuracy requirements and standard of craftsmanship as the original equipment. (Find your nearest distributor at **www.elietmachines.com**)



Caution:
For your safety, use only genuine ELIET parts on ELIET machines. You can always consult a list of original replacement parts and their reference numbers at **www.elietmachines.com**.

8. Safety regulations





8.1. Safety messages

Safety messages in the form of stickers or embossed illustrations can be found at easily visible locations on your machine. So please pay special attention to the pictograms and warning messages they contain.

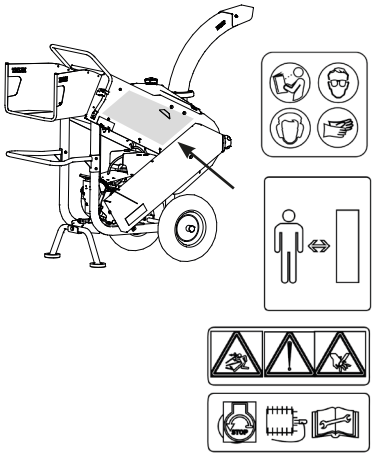

This sticker is placed to the left of the machine and provides a summary of the general safety regulations by using icons:

1. You are to read and fully understand the instruction manual before working with the machine.
2. Always wear the appropriate protective gear while operating the machine (gloves, safety goggles, hearing protectors).
3. Operating or carrying out maintenance on the machine presents the risk of injury to hands. Be alert and careful.
4. Projectiles are a constant risk.
5. Keep third parties at a distance of 10 m

This sticker is attached to the machine at engine height. The sticker signals the operator to switch off the engine and release the spark plug cap before carrying out maintenance on the machine.

(Item code: BQ 501 040 070)

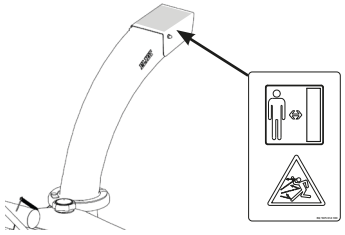

This sticker informs the user that any third parties present must keep a minimum distance from the machine (10 m).

This sticker, on the blow chute flap, refers the user to the risk of flying chips. Maintain a safe distance from the projection zone of the blow chute when the machine is being operated.

(Item code: BQ 505 014 100)

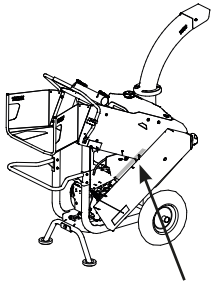



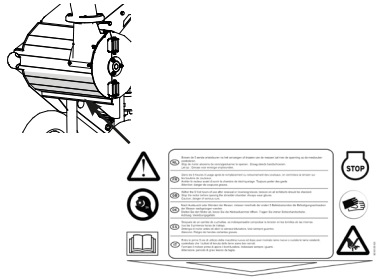

This sticker located on the trapezoidal chain guard indicates that a belt or a chain is found behind the panel. The pictogram warns of the risk of catching/crushing, and that all sensitive parts should be kept away from this device. The machine is never to be operated with the safety guard removed. Before any interventions on the machine, please carefully read the maintenance manual. You must wait a minimum of 1 minute after shutting off the machine to make sure that all moving parts have completely stopped before undertaking any interventions.

The sticker located on the trapezoidal chain guard towards the engine exhaust pipe indicates a risk of burning oneself in this area.

(Item code: BQ 505 010 810)

This sticker, located on the hopper, is a reminder to the operator to check the tightness of the bolts that attach the blades to the axle 5 hours after having terminated an intervention and when commissioning a new machine (either changing or turning the blades). You must wear protective gloves and read the maintenance manual, use the appropriate keys and verify that the internal combustion engine has fully stopped running before undertaking any interventions.

(Item code: BQ 505 010 420)

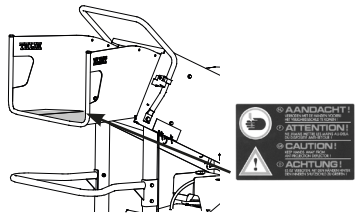

This sticker is attached in the input opening. The sticker emphatically points out the risk of injury to hands which is inherent in wood shredding. The sticker reminds the operator how to operate the machine in the safest possible way. It is prohibited to insert your hands beyond the safety shield!

(Item code: BQ 505 010 110)

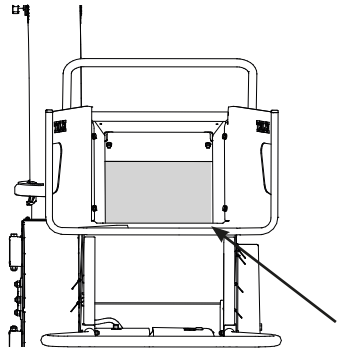

This sticker is affixed to the protective shield. There is a real risk of cutting and injury from flying chips when the operator lifts the protective shield. This very explicit sticker draws their attention to these dangers. Always wear the appropriate protective gear while operating the machine (gloves, safety goggles, hearing protectors).

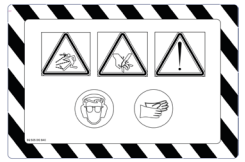

(Item code: BQ 505 010 840)

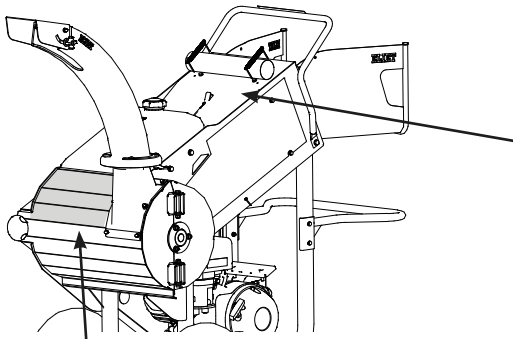



This sticker is placed on the top of the hopper and indicates the type of fuel to be used. The sticker warns of the risks associated with this type of fuel:
E5 (Unleaded 98 oct)

Petrol is highly flammable and explosive. Before refuelling, stop the engine and allow it to cool.

The engine gives off carbon monoxide, which is a poisonous gas. Never operate it in an enclosed area.

Read the user manual before use. A hot muffler can burn. Do not approach it when the engine is running.

(Item code: BQ 505 011 060)



This sticker, located on the shredding chamber, warns the operator of the danger of either catching or cutting their fingers while opening the hatch. It is imperative that you turn off the internal combustion engine and ensure that the blade axle has completely stopped turning. Never place your hands in the blow chute.
(Item code: BQ 501 040 080)

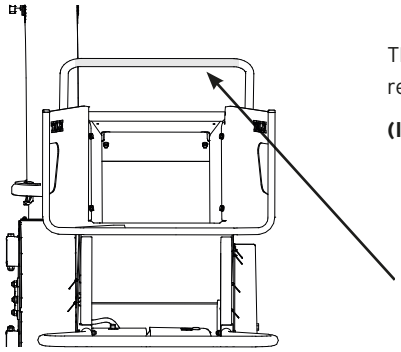

This sticker is placed on the emergency stop lever and reminds you that it is a device for stopping the engine.

(Item code: BQ 505 010 440)



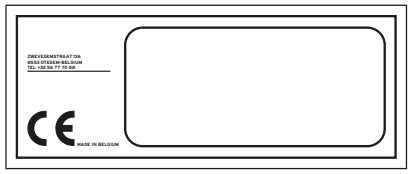

This sticker is affixed to the underside of the hopper plate. It contains all identification data for your machine: model, model number, serial number, year of manufacture, engine, power rating, weight, guaranteed A-weighted sound power level (Lw(A)).

This sticker also lists the manufacturer's details. The CE label also indicates that the machine complies with the current European Directive.

The following stickers apply exclusively to machines sold on the American market

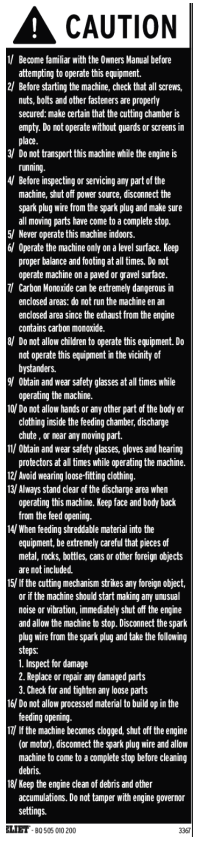

This sticker summarises a number of important safety messages taken from the instruction manual in 18 points. Caution: This of course does not relieve the operator of the obligation to read the instruction manual. ***(Item code: BQ 505 010 200)***



This sticker is located on the feeding hopper at the infeed opening. It reminds the user to operate the unit observing the stated capacity.
(Item code: BQ 505 010 190)

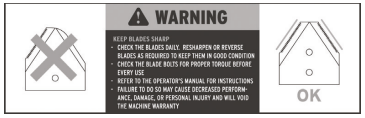

This sticker is located near the engine starter mechanism. Each time the operator goes to start the machine, they are reminded to inspect and service the blades regularly before turning on the machine
(Item code: BQ 505 010 250).

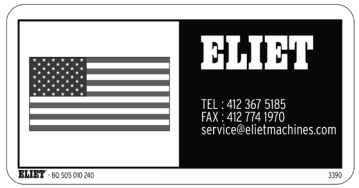

This sticker is found next to the identification sticker It contains the phone number that our American customers can call in the event of a problem.
(Item code: BQ 505 010 240)

8.2. Safety features

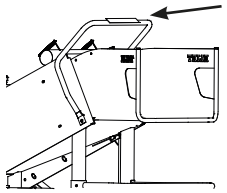

Safety-stop lever:
This lever is located above the feed funnel. When you push it forward, the engine stops.

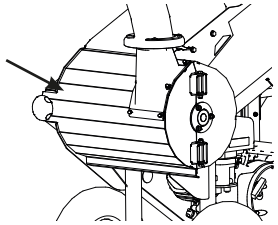

Access door to the shredding chamber:
This cover plate protects the user from injury due to the blades when the engine is running. The engine stops as soon as the tightening wheel is unscrewed to open the access door to the shredding chamber.

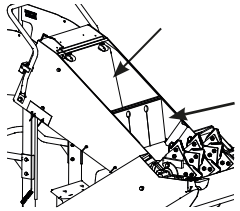

The anti-projection shield and rubber flap protect:
The safety screen and rubber flap in the infeed opening are specially designed to protect the operator against flying wood chips. Any attempt by the operator to insert his hands beyond this steel sheet is strictly forbidden.

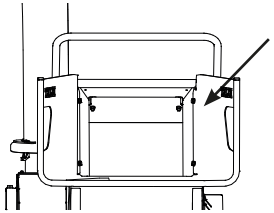

Hopper:
The hopper is mounted in the centre of the feed funnel and is oriented towards the operator. If the operator overrides the anti-projection shield despite the instructions, the hopper will form an additional obstacle preventing them from placing their hands into the shredding chamber. This makes it almost impossible for the operator to injure themselves by touching the blades while going past the feed funnel.

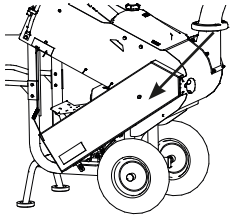

Protective cover V-belt:
The cover protects the operator from the rotating parts of the drive that could cause injury.



Safety kit:
Because we here at ELIET are concerned for your safety, we cannot stress enough the importance of using all of the protective gear included in the standard safety kit that we supply. It contains: safety glasses, ear plugs or hearing protection and a pair of riggers gloves.

8.3. Safety regulations

8.3.1. General safety regulations

- The owner of the machine must keep this user manual throughout the complete service life of the machine. It serves as a reference for the user, and enables the machine to be used and maintained in accordance with the correct instructions. Always refer to this user instruction manual if you have any doubts about how to perform a certain operation.
- If the instructions stated in this manual are not clear, do not hesitate to contact your ELIET dealer for further clarification. ELIET's helpdesk is also at your disposal during office hours to provide answers for your questions (EU +32 56 77 70 88) (US +1 412 367 5185).
- Refer to the chapter intended for the dealer (Chapter 8) and check immediately if the machine was delivered to you according to the instructions in this manual.
- When you buy the machine, ask your ELIET dealer or any other competent person to explain how to use it correctly.
- You must carefully observe all safety instructions when using the ELIET machine ! Carefully read all the instructions relating to the use of the machine. All these instructions relate to your personal safety.
- Always follow the current instructions of the work inspectorate to prevent possible accidents.
- Read and observe all safety messages posted on the machine in the form of stickers and pictograms.
- Under no circumstances should a safety device be short-circuited, disassembled or deactivated/neutralised.
- Under no circumstances should the structure and original assembly be modified without the prior explicit, written permission of ELIET EUROPE SA (Belgium).
- As shredding involves considerable physical effort, you must take regular breaks and make sure to eat and drink sufficiently.
- It is not recommended that persons with heart problems or balance disturbances work with the machine.

8.3.2. Use with care

- This machine is designed solely for shredding branches, prunings, leaves and all other organic garden debris. It must never be used for any other purpose.
- Ensure that you are concentrating on each of your actions as you use the machine. Do not let routine use of the machine dull your attention. Never act impulsively or reflexively.
- Despite the extensive safety features, do not take any reckless risks (read the list of dangers in Annex 4). Never work with a machine that is not fully assembled. Check the condition of the machine according to the instructions in this user manual.
- It is forbidden to use the machine without its feed funnel.
- Never use the machine without the base assembled.
- Never use a footboard to feed garden waste into the funnel.
- Do not constantly mulch branches up to 60 mm in diameter. As a guideline: no more than 10% of the material to be shredded should have a section above 40 mm.
- Never attempt to shred frozen branches.

- It is forbidden to throw burning objects into the machine (e.g. cigarettes, charcoal).
- Never put your hands beyond the metal anti-projection shield while the machine is in operation.
- Avoid allowing any other objects to enter the machine (cords, stones, metal, plastic, textile, etc.)
- For deontological reasons, ELIET distances itself completely from the shredding of animals and living organisms through the use of its machines.
- The use of metal tools to push organic waste into the funnel is prohibited.
- Do not use your feet to feed garden waste in the loading hopper.
- Never allow any tools to enter the funnel.
- Ensure that your working space has a minimum light intensity of 500 lux.
- Always work on a stable, level surface.
- Never operate the machine at an angle.
- Never attempt to change any machine settings or perform maintenance while the engine is running.
- The machine can cause explosions when working in the immediate environment of flammable products, vapours, etc.

8.3.3. Responsibilities of the operator

- All persons using the machine are assumed to be fully conversant with the safety instructions. The operator is fully liable when using the machine, in regard to themselves and others.
- Users are presumed to possess a certain level of maturity that permits them to make decisions based on common sense.
- Minors must not operate the machine. However, this does not apply to youths above the age of 16 years, who are learning to operate the machine under the supervision of an experienced operator.
- Disabled persons may only operate the machine when under the supervision of an experienced operator.
- Children below the age of 16 and animals must be kept away from the machine (10 m).
- ELIET recommends that the machine should not be lent to others. However, if this is done, only lend it to persons who are conversant with the machine. Ensure that the user is aware of the potential hazards and ensure that they read this instruction notice before using the machine (Annex 4 contains an indicative list of the dangers).
- Anyone who will work with this machine should be well-rested and in good physical condition. If you become tired during the work, take a rest in due time. Persons consuming alcohol or drugs must not operate this machine.
- It is **mandatory** for the user to list the number of hours of operation. This will allow the regular maintenance schedule of the machine to be followed correctly. To simplify this listing, an electronic hour counter can be installed as an option: Art. BE 412 410 001

8.3.4. Personal Protective Equipment (PPE)

- Working with this machine requires the appropriate clothing. This means clothing that covers the entire body, sturdy work gloves and closed shoes with non-slip soles.
- It is forbidden to wear loose clothing. If the operator has long hair, they must pull it back into a ponytail and wear a cap or a headband.
- For the protection of the most delicate senses, ELIET recommends the use of ear protection and safety glasses.
- While wearing hearing protection, more attention and vigilance are required, since any noises that may indicate a danger (such as screams and calls) will be difficult to hear.
- ELIET advises against the use of a mobile MP3 player, mobile phone or any other similar device while working.
- Shredding may result in dust production. If this dust irritates the operator's lungs, ELIET recommends that you wear a dust mask that conforms to the Directive: 89/686/EC.

8.3.5. Zone of danger

- While the machine is operating, make sure that nobody comes within 3 m of it.
- To place green waste into the funnel, the operator should preferably be beside and behind the machine. Do not lean over the feed funnel, to ensure that you are out of the way of any chips that may be thrown back over the anti-projection shields.
- Do not stand in the blow chute of the shredder when the machine is running.
- Contact with the moving parts of the machine may result in injury or damage. Keep hands and feet away from moving parts.
- The machine can only be used in its normal working configuration.
- It is absolutely forbidden to tilt the machine during shredding to reduce the standard feeding height. **Do not take any risks: turn off the engine immediately as soon as anyone enters the danger zone**.
- Children and animals must be kept well away from the machine.
- The operator is required to stop the machine when moving away from it.
- Once the engine is running, the user must focus all their attention on operating the machine.

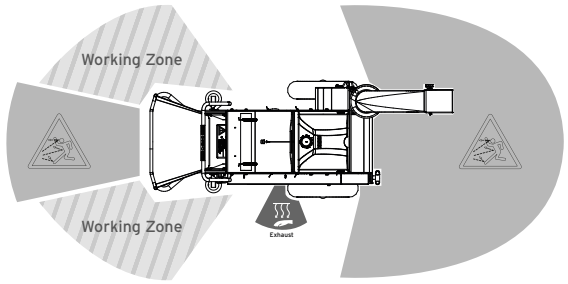

8.3.6. Regular maintenance

- Periodic maintenance is essential. For this reason, strictly follow the maintenance diagram in this user manual.
- Keep a maintenance logbook detailing the maintenance performed.
- Checking the sharpness of the blades is essential to ensure the proper operation of the machine. Always sharpen the blades on time, and when necessary.
- It is imperative that the tightness of the blade bolts be checked within five working hours after new blades have been installed or turned. This also applies after the new machine has been put into operation.
- When certain parts must be replaced due to wear or damage, always consult your ELIET dealer and ask them for original replacement parts. Your safety is at stake **(find your nearest authorized ELIET dealer at www.elietmachines.com)**.
- **You can always consult a list of original replacement parts and their reference numbers at www.elietmachines.com**
- Repair and maintenance work can only be carried out with the engine stopped and the spark plug cap disconnected. Always wait until the engine and blades have come to a complete stop before carrying out any operations on the machine.
- Always wear the appropriate clothing when performing this maintenance.

8.3.7. Respect the environment

Use the machine in a way that respects the environment:

- Avoid allowing the machine to run while you are not using it.
- Avoid spilling petrol while refuelling.
- Maintain the engine regularly in order to achieve optimum combustion.
- Sharpening and tightening the blades reduces the consumption of fuel.
- When changing oil, the dirty oil should be set aside in order to be recycled.

9. Dealer's obligations

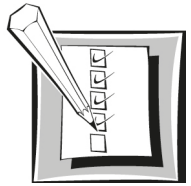



Warning:
As an ELIET dealer, **you must** familiarize your customers with **the functioning of the machine** and also **point out the possible dangers** while using it. Carefully list the maintenance points of the machine to the purchaser. Repeat these instructions until they have fully understood them all.



Warning:
The manufacturer, ELIET, wants to re-emphasise that the Dealer must expressly point out to the customers that they must examine the bolts which retain the chipping blades for security of fixings within **the first 5 operating hours.**

TO GUARANTEE SAFETY, ALL BLADE BOLTS MUST BE TIGHTENED DURING THE FIRST FIVE HOURS OF OPERATION. (TORQUE LOADING: 25 NM)

Ignoring this operation may cause serious injury and may even lead to death. In addition to damaging the machine, the client will also lose all entitlement to make a claim on the warranty. See the list with tightening torques in the annex.

- ELIET machines are packaged in accordance with current rules that apply to such transportation. Deliveries will always be ex factory. ELIET cannot, therefore, be held liable for damages that occur during transportation.
- Should you notice damage to the packaging when goods are accepted, always check the state of the machine to ensure it is not damaged. Report any deviation on the delivery order before signing off for receipt.
- Should the machine be damaged, the dealer should submit a complaint to the shipping company immediately after delivery.

The machine is not fully assembled when delivered. This assembly is the responsibility of the dealer. Here are some guidelines for the dealer:

- Start by mounting the driving handle. Secure it by screwing the two M6 bolts into the holes provided (use a 10 mm box wrench).

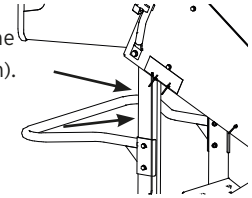

- Position the hopper upstream of the feed funnel and secure it with the two M6 bolts, washers and nuts.

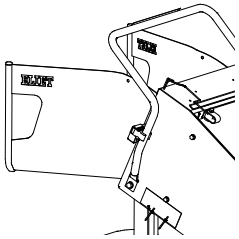

- The axle slides into the frame, and then two washers (one per side) are added. The wheels then slide onto the axles. If necessary, grease the roller bearings beforehand (Sunoco Multipurpose LR-EP2). Finally, the wheels are locked to the axles using Starlock washers.

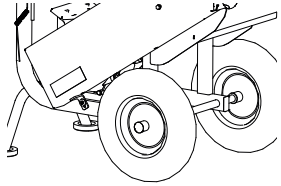

- The machine base must be mounted onto the machine before working. Slide the base into the bracket on the front of the frame. Insert the M10 screw and a washer through the base and its support. Place the nut and its washer on the engine side. Tighten the nut so that the nylon locks it to the bolt. Tighten the nut enough to remove the slack, but so that the base can still swing.

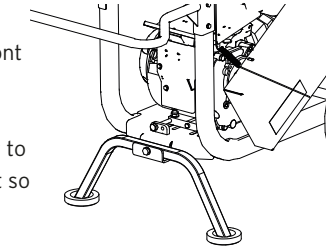

- The chip removal nozzle is adjustable and must also be assembled. Annex A.2 of this manual on page 59 shows how to change the orientation of the chip removal nozzle.

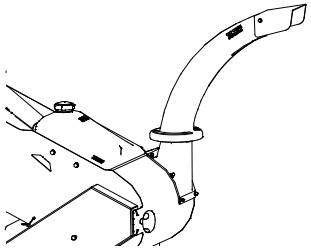

- Adjust the belt tension according to the instructions in the maintenance chapter of this manual (see §11.5.5 Adjusting the belt tension). As an ELIET dealer, you are partly responsible for the longevity of our machines. Therefore, you should also lubricate all moving parts before delivering the machine to the customer.
- When the machine leaves the factory, it contains no oil or petrol. It is up to you to add them according to the instructions in this manual (or the engine instruction booklet supplied with the machine).
- The maximum internal combustion engine speed should be set at approximately 3,200 rpm and should not generate vibrations; the idle speed should also be adjusted to avoid any vibrations or resonance.
- The dealer must test the machine for a certain period of time while checking that everything is fully functional (e.g. safety switches, emergency stop).
- **Lastly, make sure that the warranty card is duly completed and signed by the customer, to avoid any future dispute on this matter**.
  Read the warranty conditions in Annex A.5 on page 62.
- **Register** your purchase online at **www.elietmachines.com**

10. Operating instructions



10.1. Preliminary checks



Caution:
Before you begin working, make it a habit to conduct the following checks:

Checklist

1. Check the blades for wear and ensure that they are tight. For safety's sake, tighten the blade bolts. If the blades need to be sharpened, do this first. If you find cracks or fissures in a blade or in the blade shaft, you must replace it without delay (see § 12.5.6 Turning and replacing blades).
   Article number of the blades: BU 401 200 302
2. Check the oil level of the machine. To do this, remove the dipstick from the engine and check that the oil level is not below the minimum mark. (see §11.4.2 Checking the engine oil level).
3. Check that there is enough fuel in the tank. If not, add fuel (see §10.2 Adding fuel).
4. Make sure that the air filter is not too dirty (see §12.4.3 Cleaning the air filter).
5. Make sure the access door to the shredding chamber is locked.
6. Check whether the belt is still sufficiently tensioned (see §12.4.5 Checking the belt tension). If this is not the case, retighten it. (see Section 12.5.5. Adjusting the belt tension)
7. Before starting work, check that all the protective covers are in place and properly secured.
8. Before starting work, check the shredding chamber and turbine for grinding residue.
9. Make sure that all the safety devices on the machine are functioning properly (see §8.2 Safety instructions).

When these items have been checked and approved, you can prepare the area of operation (see Chapter 10.3 Preparing the work area) and move the machine to the work area.

10.2. Adding fuel

Fill the machine up if it does not have enough fuel. It's a good idea to use fresh gas. Choose unleaded petrol, preferably E5 (98 octane).

E5



Warning:
Petrol can be flammable and highly explosive under certain circumstances. The ignition and explosion of petrol can cause severe burns or property damage. Therefore, pay attention to the following points:

- Never top up fuel while the engine is running. Always allow a few minutes for the engine to cool off before topping up with fuel.
- Use only fresh petrol, ideally less than 30 days old. To extend the shelf life, additives can be added, or the use of "Alkylate" fuel. This can be a good alternative for occasional or widely spaced use.
- Keep petrol in a special tank. Keep this container out of reach of children.
- Never refuel where the machine will be used. Always keep a distance of at least 10 m from that location. This will help prevent any risk of fire.
- Clean the area around the fuel tank cap and remove dirt. Never fill the tank to the point of overflowing. Fill the tank to within approximately 10 mm of the top. So, do not fill it up all the way to the opening.
- Always use a funnel or spout when topping up fuel.
- Screw the cap back on to the tank as soon as possible. If you spill petrol on the engine while refuelling, clean it immediately.
- Be careful not to spill petrol onto your clothing. If you should do so, change your clothes immediately.
- It is dangerous and therefore strictly forbidden to top up near smokers or near an open flame.
- In the event that fuel is swallowed or gets into your eyes, obtain medical attention immediately.

10.3. Preparing the work area

- First clear the area where the machine is to be used.
- In addition, the paths leading to the organic waste must also be properly cleared, to prevent the operator from tripping over any obstacles. This is another measure the operator must take for their own safety.
- Do not operate the machine on sloping ground (no working on slopes to the front, rear or sides).
- The waste to be shredded must be sorted beforehand. In this way, you can ensure that no foreign objects will enter the machine along with the material.
- Foreign objects are defined as: any non-organic object or branchy material in excess of the stated capacity (such as metal, stone, plastic, cords, textiles, etc.) Not only can these objects cause serious damage to the machine, but they can also be ejected from the machine and cause serious harm to the operator.

10.4. Engine starting system



Caution:
Before starting the machine, remove as much dust or dirt as possible from the engine and especially from between the engine cooling fins. Dirt reduces engine cooling and can cause a fire.



Warning:
The blade shaft is driven directly by the engine. There is no blade clutch. The machine is therefore dangerous as soon as the engine is running. The engine should therefore be switched off as soon as you are in a situation where you lose control of your work.

- If necessary, remove the shredding residue from the shredding chamber before starting the machine. Failure to do so could result in damage to the starting mechanism. If the engine still does not start, check that the turbine is not clogged or blocked by chips stuck in it.
- Be sure the shredder hopper is empty (no organic waste, no tools, etc.).
- Please note that the engine can only be started when the emergency stop lever and the access door to the shredding chamber are in the correct position.
- The machine is therefore dangerous as soon as the engine is running. The cutting mechanism can eject unwanted cuttings at any time. The machine must therefore be positioned and the deflector flap must be aligned in such a way that no damage can be caused by flying chips.



Warning:
Before starting the machine, please wear adequate protective equipment (gloves, safety glasses, hearing protection).

Before starting the engine, check for sufficient oil and fuel, if not already checked during the preliminary inspection.

For more information on checking the oil level and topping up the oil, refer to § 12.4.2 Checking the engine oil level.

For more information on adding fuel, see § 10.2 Adding fuel

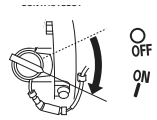

- If the tank has a supply valve, open it.
- Depending on the engine brand, operate the lever or turn the switch to the "ON" position.

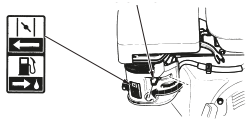

- Set the choke (starter) to "Close". To do this, turn the lever in the direction of the arrow.



- Move the speed lever up to the maximum position, towards the image of the rabbit.
- Pull the starter cord gently until you feel resistance, then pull it quickly and firmly. Allow the starter cord to wind freely.

- As soon as the engine is running, quickly move the starter lever to the "Open" position. This will prevent the engine from consuming excessive amounts of fuel. Otherwise, the engine will slow down and start to emit heavy smoke and eventually shut down. Then restart the engine without using the starter.
- If the engine cannot be started, the spark plug may be flooded or dirty. In this case, it should be cleaned or replaced (see chapter 12.5.2 Checking or replacing the spark plug)



For your information:
The procedure for starting the engine may differ slightly depending on the brand of engine. Also make sure you read the engine manual carefully under Chapter 12.1 "General". The main parts are illustrated in different models.

10.5. Stopping the engine

PUSH THE EMERGENCY STOP LEVER FORWARD
= ENGINE OFF

- Set the engine speed lever to idle - or turn the ignition switch to the OFF position to stop the engine.
- The machine can also be turned off by pushing the emergency stop lever backwards. If necessary, turn off the fuel valve.

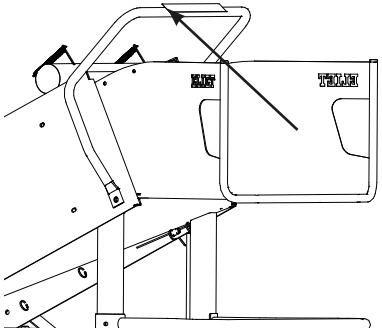



Caution:
The blades are still turning until the engine comes to a complete stop. Do not perform any operation until the engine and blades have come to a complete stop.

10.6. Working with the machine



Warning:
The guards protect the user from moving parts. Do not place your hands or other extremities behind these guards when the engine is running.

10.6.1. Before starting work

Read the safety instructions before operating the machine:

- The operator must wear proper apparel, protective gloves and safety equipment as instructed in this manual (See § 8.3 Safety regulations).
- A good gardener should plan out their work and be well-organised. This approach gives you a good overview of your work and avoids accidents or wrong manoeuvres.
- The waste to be shredded should be systematically sorted before commencing the work: big branches, small branches, leaves and any damp objects. Ensure that the material does not contain any foreign objects.
- Orient the removal nozzle deflector flap before working with the machine. Make sure you do not have to go into the removal nozzle's projection area to handle pruning waste.
- Start the engine only where you intend to shred.
- Do not start a machine with a petrol engine in a confined space. Otherwise, there is a serious risk of being poisoned by the toxic exhaust fumes generated by the engine.

10.6.2. While working



Caution:
When shredding, the operator cannot ever place their hands beyond the steel shield. By raising this shield, the operator compromises their own protection against the backflow of ejected chips.

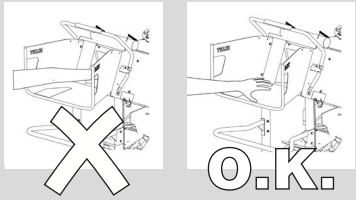

- As you feed the waste to be shredded into the feed hopper, hold it firmly. It is driven into the machine by the rotation of the blades. If you let go, it will rush into the machine too quickly, which will inevitably cause a jam. It is up to you to determine the intake rate by tightening or loosening your grip. This intake rate will vary depending on the thickness of the branches.
- When "guiding" the waste to be shredded, be aware of the engine speed. If you notice that it is struggling (slowing down significantly), remove the entered material immediately so that it can return to its original speed.
- Overfeeding the machine all at once does not make sense. You will obtain quicker results by reducing the amount of material that you feed into the machine.
- Feed the branches into the feed hopper starting with their thickest side.

- It is best to insert the branches on the right side of the feed hopper. This will extend the shredding time of the cuttings before they are sucked into the turbine and minimise the size of the cuttings.
- If there is a substantial volume of leaves to be shredded, ELIET recommends alternating leaves and branches.
- If you notice any strange noises, immediately stop shredding. Stop the engine immediately (emergency stop lever) and investigate the cause of the defect. Before proceeding, perform the necessary repairs.
- If you find that a foreign body has entered the machine despite the previous sorting of the waste to be shredded, stop the engine immediately. Remove the problem object and make sure it has not damaged the machine. If damage has been caused, first complete any repairs that are necessary.
- In principle, the engine should stop spontaneously when the shredding chamber is opened. If a problem in the electrical system prevents this from happening, the operator must immediately turn off the machine and stop using it until the cause of the problem is resolved.
- If there is a blockage in the shredding chamber, turn the machine off immediately to clear the blockage. Caution: Make sure the engine and blades have come to a complete standstill before carrying out any operation on the machine.

10.6.3. If the engine stops

The engine may stop if it is overloaded, if too much material is added, if there is a blockage in the discharge nozzle, if there is not enough fuel, if the fuel valve is closed, if the engine oil level is too low, if the emergency stop lever is not positioned correctly, or if the access door to the shredding chamber is not closed properly. In these cases, the shredder can easily be restarted. Follow the procedure below:

1. Check the fuel level in the fuel tank (see §10.2 Adding fuel).
2. Remove any branches caught in the feed hopper.
3. Carefully pull on the starter handle. This will show you if the blade shaft is still blocked. Release the handle as soon as you feel resistance and can no longer pull it. There is no need to pull the handle by force, as you will only break it or overload the starting mechanism.
4. If the blade shaft becomes blocked, empty the shredding chamber. To do this, you need to open the access door to the shredding chamber, which is locked by a clamping wheel. Unscrew it completely and then open this door.

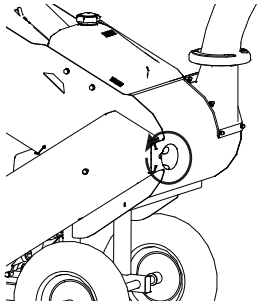



Caution:
You should always wear gloves for any handling. When emptying the shredding chamber, you brush against the blades. These blades are extremely sharp and there is a real risk of cutting yourself. Be careful and try to avoid contact with the blades.

5. Remove all cuttings and material from the shredding chamber. Close the access door to the shredding chamber and check that this has been done properly.
6. If any cutting residue is blocking the turbine propeller, clear the contents of the turbine with a tool or by carefully rotating it.
7. When the removal nozzle is blocked, open the access door to the shredding chamber to clear it. After the removal nozzle has been cleared, close the access door to the shredding chamber and lock it by screwing on the clamping wheel.
8. When re-feeding the machine, do it more slowly to prevent the machine from jamming again.
9. Start the engine again to start the machine. (see § 10.4 Starting the engine)

Tips to avoid blocking the cutting rotor & turbine propeller

- Do not insert branches with a larger cross-section than recommended (max. 6 cm), or a large quantity of branches whose final volume exceeds the maximum recommended cross-section (max. 6 cm).
- Do not let go of the goods when placing them into the loading hopper, support them by holding them back if necessary, feed the machine taking care that the engine does not strain too much.
- Also watch the flow of chips out of the nozzle: a weak flow can indicate the beginning of a jam, or an engine speed that is too low, and, of course, the cutting rotor is too slow due to an excessive load.
- Ideally, insert the material to be shredded on the right of the feed hopper wall; this will ensure that the chips are shredded more finely during the shredding process, which will also reduce the risk of clogging the turbine and the removal nozzle.
- Do not fill the inlet of the feed hopper more than halfway, to allow a sufficient air volume to enter the shredding chamber and ensure "good airflow". Good air circulation will also limit the risk of blockages and jams. Pack the foliage, or any handfuls of leaves, to avoid

11. Transporting the machine

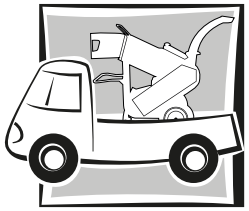

- This machine may only be moved and transported by adults.
- Make sure to clear the shredding chamber and turbine before moving the machine. It is very important that the infeed hopper is completely free of branches and material.
- While the machine is being loaded, children, animals and unauthorised persons must be prevented from entering within a 10 m radius.
- If you want to move the machine (even a few metres), you must always wait until the contents of the shredding chamber have been removed and no more chips are being ejected through the ejection nozzle. It is essential that there is no material left in the feed hopper.
- Before transporting the machine, the engine must be off.
- If the machine tips over, right it as quickly as possible. This will limit the risk of engine oil spreading to the air filter and fuel leaking out of the machine.
- Use slip-resistant ramps to load the machine into a van or trailer. Make sure that they are securely attached to the vehicle or trailer.
- Under no circumstances should the angle of the ramps exceed 25°.
- Never move or place the machine on a floor that cannot support the weight of the machine and the person (for information: for the machine, take into account a net weight of approximately 150 kg).

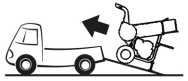

- If you are climbing a slope, the blade shaft should be placed first. Most of the weight of the machine is located at the front.
- If you are going down a slope, the blade shaft should be placed last.

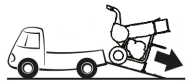

- Never use the machine to transport objects or people.
- Choose your transport route carefully so that you encounter a minimum of obstacles.
- Choose a flat, even route.
- Leave sufficient clearance behind the ramps (4 m).
- Make sure the vehicle's parking brake is fully engaged.
- Be careful and composed when loading and unloading the shredder so that the machine does not tip over and cause an accident.
- The maximum degree of a side slope tolerated by the machine is 10°.
- Make sure that the machine is properly and firmly secured to the vehicle during transport.
- When moving the shredder, never tilt it more than 12°, otherwise it will tip forward.
- Do not overload the vehicle. The shredder has a net weight of approximately 150 kg.

- The shredder is equipped with a number of anchor points. These points are indicated by a hook symbol.
- When installing and securing the machine in the holding area of a vehicle, always ensure that the removal nozzle faces inward so that it does not extend beyond the contours of the machine. This will prevent damage when moving the load.
- To load the machine with a crane into the bed of a truck, a lifting strap can be passed through the machine.

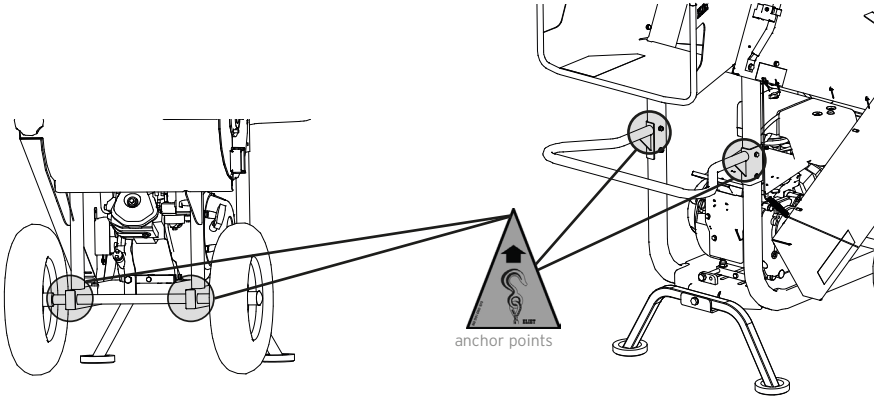

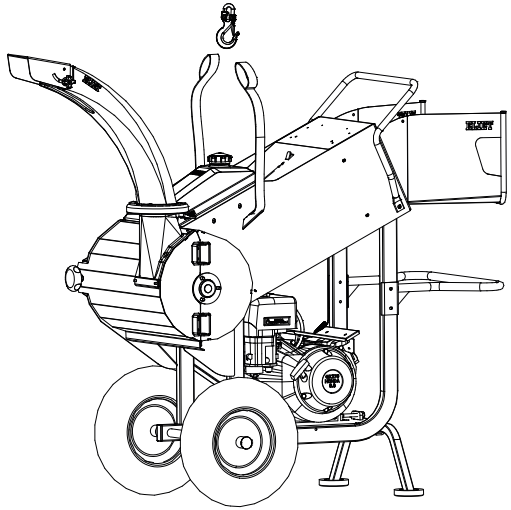

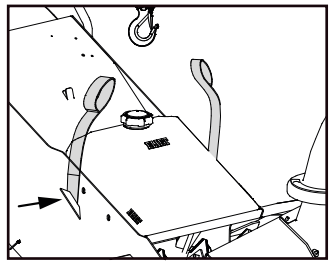

12. Maintenance



12.1. General

ELIET recommends that you bring your machine to an authorised ELIET dealer once a year so that it can undergo complete maintenance and inspection (to find your nearest authorised ELIET dealer, go to **www.elietmachines.com**). Your ELIET dealer is always at your service for maintenance needs and to advise you. They will have original ELIET parts and lubricants in stock. Their staff can always obtain advice and service from the help desk at ELIET, in order to provide you with impeccable after-sales service.



Caution:
Use only original ELIET spare parts for repairs. These parts are manufactured according to the same standards and quality as the original machine parts. You can always consult a list of original replacement parts and their reference numbers at **www.elietmachines.com**.

Perform maintenance in a room intended for this purpose. This room must be:

- Spacious
- Dust-free
- Easily accessible
- Tidy
- Well lit
- Quiet

These characteristics are important to enable maintenance to be performed in an optimal manner.



Caution:
All maintenance work requires the engine to be shut down.



Caution:
All maintenance operations require you to wear gloves, and also safety goggles for some operations. These items are supplied in a safety kit when the machine is delivered.

12.2. Maintenance diagrams

12.2.1. Lubricants

Engine **(1.1l)**	SUNOCO SUPER DENALUBE SAE 20 W 50 API SF/CC
Moving parts	NOVATIO WHITE SUPREME GREASE

12.2.2. Special maintenance

A. Special blade-tightening maintenance
Once mounted on the blade shaft, the blades "find their place" after a break-in period. The bolts may loosen during this time. Over time, the blades can become loose and the blade fixing bolts can become damaged and break and could, if not checked within the recommended time, come loose and cause irreparable damage to the blade shaft, turbine, removal propeller, access door to the shedding chamber and removal nozzle or even be ejected from the machine via the inlet hopper or removal nozzle. You have an obligation to prevent this type of avoidable problem by scheduling this special maintenance during the brief break-in period.
WHEN:
Within the first 5 operating hours after starting up the new machine.
Within the first 5 hours after turning the blades.
Within the first 5 hours after replacing the blades.

WHAT: Check the torque loading of the blade bolts and tighten them if needed (torque loading: 25 Nm).



Caution:
Use an appropriate calibrated torque wrench.



Warning:
Failure to perform this special maintenance may result in the blades becoming detached during operation. This will seriously damage your machine and could result in permanent injury or death to the operator or others in the vicinity of the machine. Any damage resulting from this negligence is not covered by the warranty.

12.2.3. Scheme of periodic maintenance

Routine checks before each work session

- Carry out a visual check of the condition of the machine (see § 12.4.1 Visual check).
- Check the oil level in the engine (See 12.4.2 Check the oil level in the engine).
- Cleaning the air filter (See 12.4.3 Cleaning the air filter)
- Check the machine for signs of abnormal wear or cracks.
- Check for seized bolts (blades, wheels, bearings, engine, etc.).
- Sharpening of the blades. (See 12.4.4 Sharpening the blades)
- Checking the belt tension. (See 12.4.5 Checking the belt tension)
- Cleaning the machine (See 12.3 Cleaning the machine)

Maintenance after 20 hours.

- Daily maintenance (see § 12.2.3 Periodic maintenance diagram).
- Changing the engine oil.
- Checking or replacing the spark plug.
- Cleaning or replacing the air filter
- General lubrication.
- Adjusting the belt tension
- Turn the blades, sharpen and/or replace them.

12.3. Cleaning the machine

12.3.1. The importance of good cleaning

ELIET recommends cleaning the machine after each use. It is recommended that you take advantage of each cleaning to inspect the machine; this allows you to check the condition of the parts and the machine. This allows you to take action in time and prevent breakdowns. You will also extend the life of your machine.

Failure to do so will:

- Premature wear and tear.
- An increased risk of fire.
- The decreased cooling efficiency of the engine.
- An increased risk of short circuit.
- A reduction in performance.
- The wear and tear of the safety stickers.
- The late detection of wear or the appearance of possible cracks.

NOTE: You will lose your warranty rights if you neglect the daily cleaning of the machine.



Warning:
A machine that is no longer in good working condition may compromise



Warning:
Wood chips, shavings and dust can accumulate under the screens and ignite due to overheating. Remove these build-ups near electrical components or the engine. Clean the machine thoroughly every day. Clean the machine thoroughly after each use.



Caution:
Wear appropriate clothing for cleaning. Gloves should be worn at all times.

12.3.2. What does cleaning involve?

When cleaning, you should go through the entire machine and inspect all its components. Make sure that the parts are not warped, that the welds are not cracked and that there is no excessive slack in the various components.

The important points are:
- The welds of the blade shaft
- The blade fixing bolts
- The blade shaft fixing bolts
- The welds of the ejection propeller and the welds of the turbine.
- The anti-projection flap in the feed hopper.
- The engine must be kept free of dust and dirt. The cooling fins must be clean and the exhaust area must also be clear. To avoid clogging the fuel tank, the filler cap area should always be kept clean.
- The bearings must be cleaned and free of clogged dirt on the lubricant residues. Reapply lubricant after cleaning.

If you notice any problems, repair or replace them first. Please contact your authorised ELIET dealer (to find your nearest authorised ELIET dealer, visit **www.elietmachines.com**).
The cleaning of the machine requires more than cleaning its outer shell. You must open all the guards to clean the less accessible areas as well.

The main points to watch out for are:

- Build-ups of dirt (chips, wood residue, dust, sand, sticky leaves, etc.) inside the machine must be removed. Use a soft brush or vacuum cleaner to remove this dirt.
- Fibrous waste that accumulates around the blade shaft and engine pulley must be removed so that it does not damage the bearing protection seals.
- Remove any dirt build-up that sticks to the inside of the shredding chamber.
- Remove any accumulated dirt that adheres to the inside of the turbine, the removal propeller, the access door to the shredding chamber, and the removal nozzle.



Caution:
Always wear gloves for all maintenance. You come into contact with the blades when cleaning the shredding chamber and the turbine. These blades are extremely sharp and there is a real risk of cutting yourself. Be careful and try to avoid contact.

- Clean the frame with a dry cloth. Especially in areas where there are stickers with safety messages (do not use cleaning products that could damage the paint or stickers).
- If the safety messages on a sticker are no longer legible, replace them. Original stickers are available from your ELIET dealer.
- The use of compressed air is a great help in cleaning a number of components very easily.
- Cleaning the machine with high pressure is allowed. General lubrication is recommended after the machine is completely dry. However, avoid splashing water on the bearings, protective panels and various filler caps. Water is the main cause of oxidation formation and must be avoided at all times.
- Allow the engine to cool before applying a high-pressure cold water spray.
- Using a vacuum cleaner is a good way to remove dirt from areas that are not easily accessible.



Warning:
If you have to remove a guard before maintenance work, you must always put it back on correctly after the maintenance. The various shields and protective guards are intended to guarantee your safety.

12.4. Routine checks before each work session

12.4.1. Visual check

Make sure that parts are not warped, that the welds are not cracked and that there is no excessive slack in the various parts. If you notice any problems, repair them first.

Check that the machine engine is running at the prescribed maximum speed (about 3,200 rpm) and that there is no excessive vibration or resonance (rpm counter available from your ELIET dealer). Never change the default engine settings.

12.4.2. Check the oil level in the engine

Refer to the 'Engines' section in § 7 'Main components' to check the level using the dipstick and the different drainage and top-up plugs.
- Place the machine on a flat surface and take a clean cloth, then unscrew the dipstick.
- Generally, the oil level cannot be read correctly immediately. Wipe the dipstick and place it back on its neck without screwing it back on.
- The oil level can be properly observed when you dip the dipstick for the second time.
- The oil on the dipstick should be between the minimum and maximum levels.

If the oil level is too low, add oil through the top-up cap. Only use the recommended oil. Do not add too much oil at once and check the level regularly.

12.4.3. Cleaning the air filter

- The design of the air filter varies depending on the brand and type of engine.
- The air filter sits under its protective cover, next to the exhaust and near the engine's fuel tank.
- Remove the protective cover.
- Remove the air filter, which consists of a foam pre-filter element and a honeycomb paper filter element.
- Simply clean the pre-filter element (if present) by flushing it with a little petrol and blowing it out with compressed air.
- Clean the paper filter element by blowing it out with compressed air or a vacuum cleaner.
- Place these filter elements back in their original position after cleaning them.



Caution:
If the machine overturns, check the air filter as soon as possible. As the engine is in an unusual position, oil could flow from the guard to the air filter. The oil no longer allows air to pass through if it soaks the filter paper. Replace any oil-soaked air filter.

12.4.4. Sharpening of the blades

Machine performance and shredding quality greatly depend on the condition of the blades. Enhance your own work comfort by taking some time to check the blades, and if necessary, sharpen them.

SHARP BLADES = OPTIMAL PERFORMANCE



For your information:
The blades can be sharpened without having to disassemble them. You can use a small angle grinder fitted with a grinding disc suitable for metal.



Warning:
Always wear safety goggles and hearing protectors when sharpening blades. Gloves are also mandatory for performing any type of maintenance work.



Caution
Avoid unintentional pulling on the starter cord during blade maintenance. Before beginning maintenance, pull the starter cord to the end of the reel. Place the cord around a back tube of the frame and tie a double knot.

- Open the access door to the shredding chamber by unscrewing the tightening wheel.
- When sharpening, use an angle grinder and a suitable disc. Always maintain the original angle of the cutting edge and sharpen only the bevelled part of the blade edge. Limit sharpening to what is necessary to restore the cutting power of the blades for as long as possible. Correct and timely sharpening will extend the duration and operating life of the blades.
- As a precaution, disconnect the cable from the spark plug.

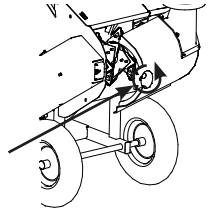



For your information:
If the blades are dull (rounded cutting edge), they should be replaced or turned.

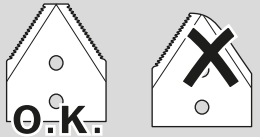

Each blade has two sides:
- The front of a blade has two bevelled cutting edges.
- The teeth profile of the cutting area is clearly visible on the backside of a blade. **(A)**

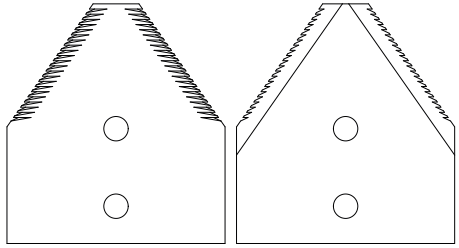

(A) **(F)**

A sharp cutting edge and a correct cutting angle are essential for efficient shredding. The blades must be properly sharpened to ensure that these two characteristics are met.

- If blades become blunt, the sharp cutting edge will become worn and will be upset to form a wider rib. **(1)**
- By grinding a little metal from the cutting edge, you can again obtain a sharp cutting edge from this wide rib. **(2)**
- To do so, move the grinding disc along the ribbed edge.
- Note: Regular sharpening will reduce the amount of metal you need to remove in order to obtain a sharp cutting edge again. As a result, you will spend very little time on this operation to obtain perfectly sharp cutting edges. (ELIET recommends sharpening the blades after every 10 working hours.)
- Avoid grinding at the same location for a long period of time. This will prevent local discolouration of the blades, which indicates overheating and a modification to the actual structure of the material (and its hardness) at that point.
- It is essential that you do not change the cutting angle of the blade as you are sharpening it. **(3: badly-sharpened blade)**
- Failure to maintain the cutting angle by blunting the angle **(4)** or changing it in any other way **(5)** will cause the blades to become stuck while cutting wood, leading to a less powerful machine. A cutting angle that is too sharp **(6, 7)** will lead to weaker cutting edges, which will considerably reduce the duration of the blades.

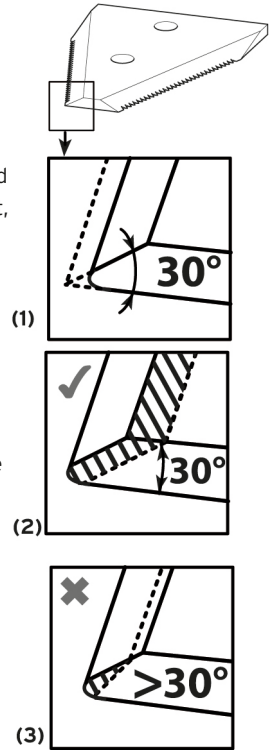

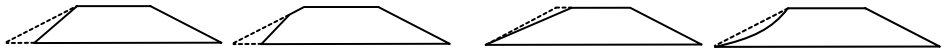

(4) (5) (6) (7)

- Never grind the backside of the blade. In the case of RESIST/8™ blades, the profile is on the rear side. If you grind away the teeth, the blade will lose a great deal of its cutting force.
- The tip of a blade is subjected to the heaviest use during shredding. As such, sharpening the tip should only be done when strictly necessary to avoid weakening it.
- Each time a blade is sharpened, a bit of material is lost, reducing the active cutting edge. You can grind the cutting edge until you have reached halfway through the width of the tip of the blade. If you go beyond this limit, you could compromise the duration of the cutting edge that has not been used yet. At this point, it is recommended that you turn the blades. (see § 12.5.6 Turning and replacing the shredder blades).
- If the tip of a blade is rounded, shredding efficiency will be reduced. In that case, continued sharpening serves no purpose. This would mean that you need to either turn or replace the blade.

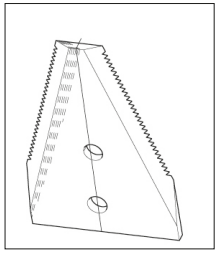

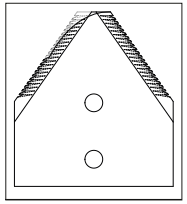

12.4.5. Checking the belt tension



Warning
Check the belt tension only when the engine is stopped. The spark plug cap must be removed.

- The internal belt guard is equipped with a removable black cap. By removing this cap, you can clearly see the V-belt through this opening.
- If you press the belt down with your thumb (pressure corresponding to a weight of around 4 kg), it can bend the equivalent of 1 cm. If this is the case, the tension is sufficient.
- After checking the belt tension, the protective cap must be replaced on the internal protective guard.
- Adjust the belt tension if you find that it is too low or too high (see § 12.5.5, Adjusting the belt tension).
- As a precaution, disconnect the cable from the spark plug.
- An under-tensioned belt can cause slippage on the transmission pulleys or bang against the guards, so its life will depend on proper tension.
- A new belt will naturally slacken during the first few hours of operation and throughout its life. It is therefore advisable to check the belt tension after 5 hours of operation (see § 12.5.5, Adjusting the belt tension).

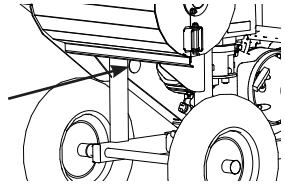

12.5. Maintenance after 20 hours of work

12.5.1. Changing the engine oil

- Make sure that the engine is installed on flat ground and is stopped.
- At the rear of the engine, under the engine floor, you will find a plug screwed into the guard (see engine manual).
- Before loosening the cap, take a container with a minimum capacity of 2 litres.
- Allow the engine to completely empty itself of oil (+/- 1.1 l).
- Screw the drain plug back onto the oil drain port. Wipe off any oil with a clean cloth.
- Refill the engine with new oil as recommended by the engine manufacturer. ELIET recommends a high quality oil with a high detergency level: SUNOCO DENALUBE SAE 20W50 API SF/CC.
- Pour approximately 1.1 l of oil into the filler hole. Then wipe off any oil stains. Allow the oil to drain completely into the guard before measuring the oil level with the dipstick.
- Insert the dipstick into the fill hole without screwing it back in. Pull it out and check if the oil has reached the maximum mark. If not, refill the oil.

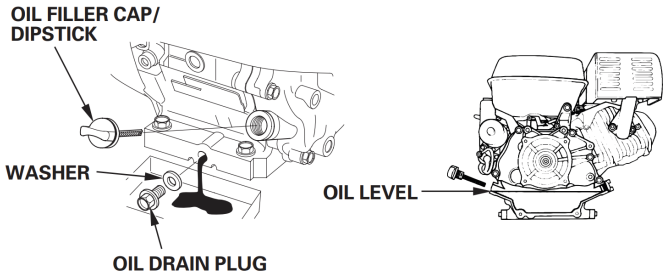



Warning:
Insufficient oil in the engine can cause irreparable, serious damage to the engine.

12.5.2. Checking and replacing the spark plug, if necessary

ELIET proposes the following spark plugs: NGK BPR 6 ES

- Turn off the engine and remove the spark plug cap.
- Clean the area around the spark plug and remove it from the engine.
- Use a thickness gauge to check that the gap between the electrodes is 0.8 mm.
- The spark plug should be replaced when it is very dirty.

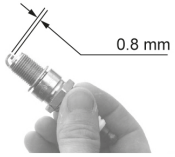

To check the quality of the ignition, proceed as follows:

1. Replace the spark plug on its cap.
2. Place the cap with the spark plug so that the electrodes or spark plug threads are in contact with the mass of the engine.
3. Pull on the starter handle.
4. Observe if there are any sparks between the electrodes of the spark plug.
5. If there are, and these sparks are clear and well centred between the electrodes, the spark plug is still working well.
6. If the sparks are weak, irregular and only intermittent between the electrodes, the spark plug is probably damaged and should be replaced.



Caution:
When reassembling the old or new spark plug, ensure you do not damage the screw thread. Tighten the spark plug to 18 Nm

12.5.3. Replacing the air filter

- These actions are completely identical to cleaning the air cleaner (see Chapter 12.4.3, Cleaning the air filter).
- New air cleaners of the correct type are available from your ELIET Dealer or from a dealer authorized by the engine manufacturer.

12.5.4. General lubrication

ELIET believes that it is important to use high quality products, as they extend the life of machines that are sometimes required to work under extreme conditions. Therefore, special lubricants have already been used in the manufacture of the machine. ELIET also recommends the regular lubrication of the bearings and the different pivot points.

A. Lubrication of the bearings



Caution:
As with all maintenance tasks, the engine must be turned off. The spark plug cap or plug is disconnected. Wearing gloves is mandatory since the blades are extremely sharp and likely to cause cuts

- Unscrew the tightening wheel and open the access door to the shredding chamber.
- Spray a small amount of molybdenum disulfide (MoS2) release oil on the blade shaft bearings and allow it to work.
- Wipe off any clinging dirt around the bearing seals with a cloth. Inject more degreasing oil into the gaskets so that it penetrates to the bearings.

- Any excess amount should be wiped off.
- Then spray grease (e.g. Novatio White Supreme Grease) into the bearing seals and wipe off any residual grease on the walls with a cloth.
- Alternatively, if desired, the entire blade shaft can be sprayed with degreasing oil. The MoS2-based degreasing oil dissolves rust, so such handling cannot be detrimental.

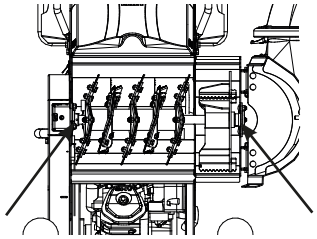

B. Lubrication of the pivot points

- Hinge of the access door to the shedding chamber
- the roller bearing of the wheels.
- First, graphite oil should be injected. Leave the product on for a few minutes. Then wipe off any residual lubricant and dirt with a cloth. When the pivot points are clean, spray grease (e.g. Novatio White Supreme Grease) into the hinge joints.

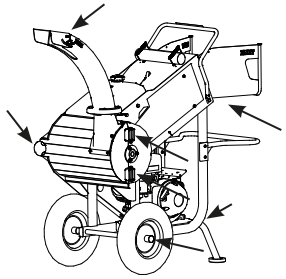

Pivot points are defined as:

1. the pivot point of the emergency stop lever,
2. the pivot point of the foot and the pivot points of the anti-projection deflector located in the loading hopper,
3. the wheel of the access door to the shredding chamber,
4. the axles supporting the transport wheels,
5. the joint of the removal nozzle and its deflector flap.

All the mentioned lubricants are available from your ELIET dealer, see **www.elietmachines.com**.

12.5.5. Adjusting the belt tension



Caution:
The engine should always be stopped and the spark plug cap disconnected during belt tension adjustment.



Belt maintenance tips
A belt will continually stretch throughout its life, so checking the tension every 20 hours of use is mandatory.
Tighten it, if necessary.



Caution
When the belt is new, it will slacken more quickly during its first few hours of use. A check after the **first 5 hours** is imperative.



Caution
The engine should always be stopped and the spark plug cap disconnected during belt tension adjustment.

To adjust the belt tension, the inner protective guard must be removed. To do this, unscrew the four M6 bolts (without nuts). The outer shield is fixed to the frame by an M6 bolt with a cap nut and, at the front, by an M8 bolt. To loosen them, you will need two polygonal wrenches (10 mm and 13 mm).

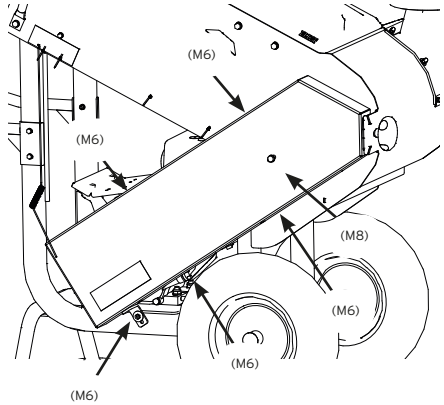



Caution
In belt drives, fingers can get caught between the tight belt and the pulley. So be careful and wear gloves. Do not allow an assistant to run a driven component while you are maintaining the transmission.

A) Measure the belt tension

The importance of correct belt tension

- A belt that is too tight will weaken the bearings or axles and will wear out much faster.
- A belt that is not sufficiently tensioned may come out of the grooves and slide on the pulleys, resulting in loss of efficiency, overheating, warping and premature wear.

The principle of belt tension measurement: when measuring the belt tension, the force required to press the belt halfway between the two pulleys over a certain distance is determined. This force depends on the type of belt, the diameter of the pulley and the distance between the two pulleys.

In the case of the Major, the belt is: Gates Quad Power SPA1600 (Reference: BA 521 516 000)
Diameter of the smallest pulley: 112 mm
Distance between pulleys: 600 mm
Deflection: 10 mm
Force to be applied: 40 N (4 kg)

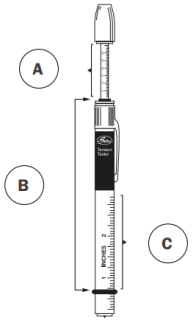

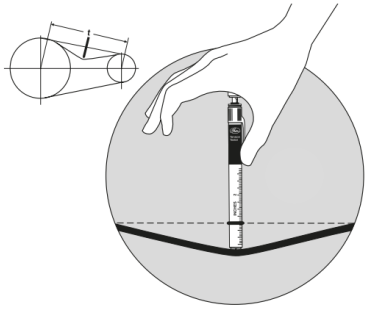

A. Scale for measuring the deflection force
B. Rubber rings
C. Scale for measuring the deflection distance

This tensiometer has two scales: the scale on the fixed part indicates the deviation, the scale on the moving part indicates the force.

Procedure to be followed

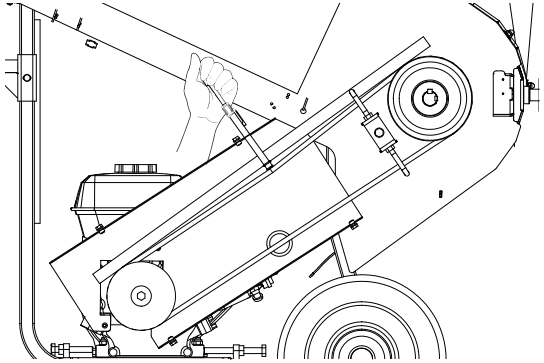

- Determine the centre between the two points of contact of the belt with the pulleys and make a mark at this point with a felt tip pen.
- Place a straight batten against the outer circumference of both pulleys so that it is in contact with the belt along its entire length.
- Slide the rubber ring (1) onto the scale of the fixed part (deflection distance) of the gauge at 10 mm.
- Slide the small rubber ring (2) over the gauge on the moving part (Deflection force) until it touches the fixed part.
- Now place the tensiometer with the fixed part on the back of the belt where you made the mark. When doing this, place the gauge perpendicular to the belt.
- Now press the rubber end of the moving part of the gauge towards the belt. The belt bends under the effect of the force exerted. The extent of the deviation is easy to see in relation to the straight bar that indicates the initial situation. Press until the ring (2) is flush with the bottom of the batten. Note: do not press beyond this point.
- By pressing the tension gauge, the moving part also moved into the fixed part, causing the small ring (2) to move on the scale. When the tensiometer is removed from the belt, the applied pressure force can be read where the small ring 2 is on the scale.
- This indication must be 40 N.
- If the force is too low, the belt must be tightened.

B) Re-tensioning the belt

- The belt is tensioned by pushing the engine block towards the front of the chassis. First, loosen the four M8 bolts on the engine base (2x 13mm wrench) and loosen the tensioning screw (M10) on the front of the frame (17mm wrench).
- Push the engine back in using the bolt (M10) at the back of the engine assembly after loosening the lock nut. Before loosening the engine, place two marks on the frame plate on the sides of the engine assembly with a marker. This will save you time when aligning the pulleys later.

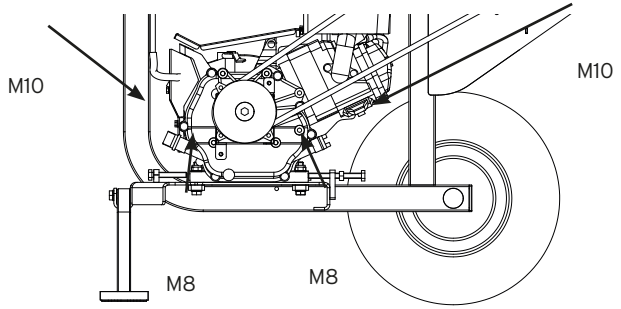

- Once the correct belt tension has been obtained, straighten the engine position by moving the M 10 front pressure screw (17 mm wrench). Use the markers made with the marker.



Caution
Always check that the pulleys are aligned and mounted correctly.
Misalignment reduces the performance and life of the belt drive.

The main causes of misalignment are:

- The pulleys are badly positioned on the axes;
- The engine and driven shafts are not parallel;

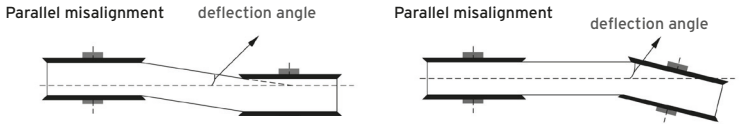

- The alignment of the two pulleys can now be fine-tuned by tightening the pressure screw (M10) at the front of the engine towards the rear. Place a metal ruler straight to check that there is no gap between it and the pulleys. The pulleys are properly aligned when the metal ruler placed against the pulleys touches the four points indicated.

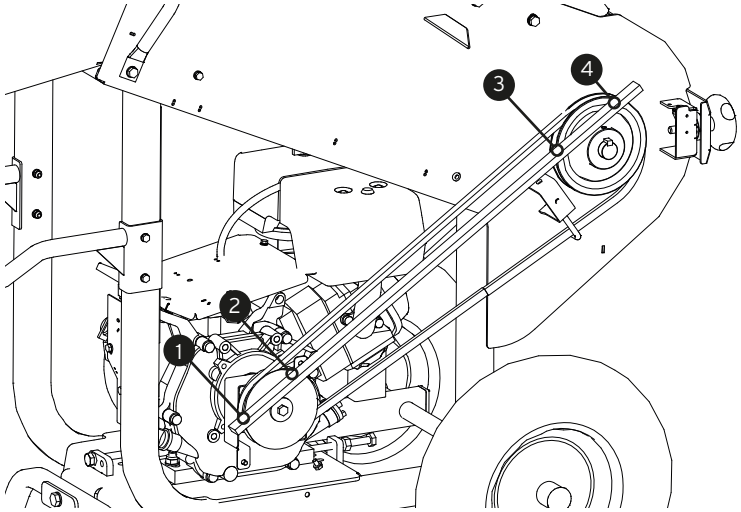

- Once the tension has been properly adjusted, tighten the locknuts on the two M10 pressure screws to lock them in place.

TENSION + GOOD ALIGNMENT
= LONG BELT LIFE

- After setting the required tension and alignment, the engine can be reattached by firmly tightening the four engine bolts (M8) (2x 13 mm wrenches).
- Only at the end, after a final check of everything, can the protective covers be put back in their original position.

12.5.6. Turning and replacing the shredder blades

If blades are sharpened at regular intervals, a blade life in excess of 50 hours for each side can be guaranteed. As soon as the cutting edges are worn, the blades can be turned. This new cutting edge can also be used for 50 hours. When both sides are worn, the blades must be replaced. Order number: BU 401 200 302



Caution:
Any consequential damage resulting from the poor maintenance of the blades will invalidate any applicable warranty claims. If necessary, consult your authorised ELIET distributor for advice.

12.5.7. How to turn blades



Warning:
The wearing of protective gloves is mandatory, as the blades are razor sharp!



Caution:
Avoid unintentional pulling on the starter cord during blade maintenance.
Before beginning maintenance, pull the starter cord to the end of the reel.
Place the cord around a back tube of the frame and tie a double knot.

- As a precaution, disconnect the cable from the spark plug.
- Open the access door to the shredding chamber by unscrewing the tightening wheel.



For your information:
Dismantle, turn and reassemble the blades one by one so you do not place them incorrectly. It is better to proceed blade by blade so you do not make a mistake.

The mounting of the blades in the blade axles is NOT random. There is a certain orientation of the blades that is very important for the proper functioning of the machine. This placement must be respected when reassembling. For this purpose, the rotor was divided into two zones.

Zone A: outer blade discs (2)

Zone B: inner blades (3)

- To ensure a good overview, we will work area by area.
- To remove the blades, unscrew and remove the two bolts (M8). If the bolts are damaged, replace them. Remove the blades with a grip.

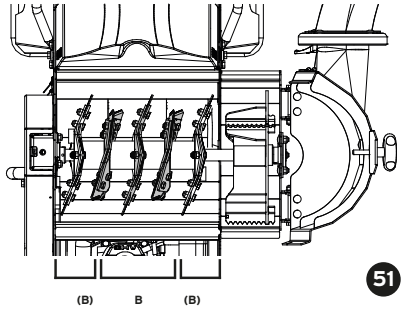

- **Area A**: to remove the blades from the outer discs, proceed as follows: remove one blade from the left side, rotate it 180° and re-install it in the same location but on the right disc. Rotate the right disc blade 180° and insert it into the vacant hole in the left disc. Proceed in the same way until all the disc blades in zone A are reversed (see illustration).

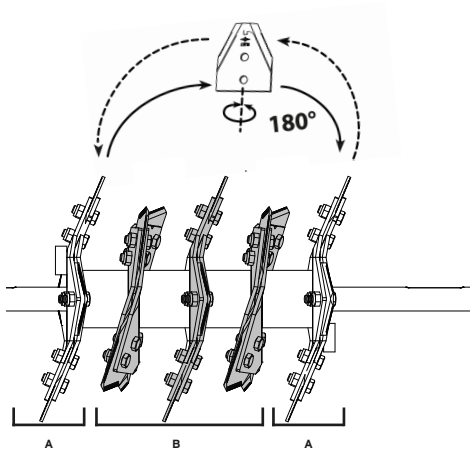

- When all the blades in area A have been turned, check that they all have the cutting edge towards the centre and not towards the wall of the shredding chamber. If this is not the case, it means that the blades are not oriented correctly.

- **Zone B**: for the discs located between the 2 discs of zone A, proceed as follows: remove the blades from zone B and rotate them 180°, then re-install them on the other side. The blade that must be removed to make room for it is in turn turned 180° and inserted into the vacant hole.
- Repeat this process until all the blades are reversed
(zone B in the illustration).

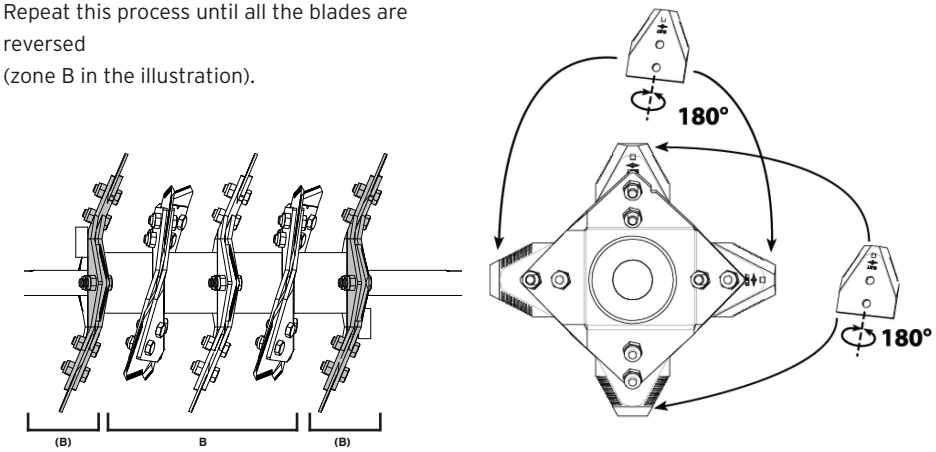

- When all the blades in area B have been turned, they should all be oriented with the cutting edge facing the blade shaft. If not, their positioning must be corrected.

12.5.8. How to replace blades

Please consult your ELIET distributor to purchase of a new set of blades, quoting the following reference number: BU 401 200 302.



Warning:
The wearing of protective gloves is mandatory, as the blades are razor sharp!

- When you replace the blades, you should also replace the bolts and nuts that secure them.
- After removing the blades, first remove any dirt that has accumulated between the two halves of the knife support plates before reassembling the new blades. Use a painting knife to do this, for example.
- Do not forget to tighten the bolts when refitting the blades. It is highly recommended to check all the bolt connections before closing the shredding chamber access door.
- Make sure you replace the bolts in the blade axles, i.e. the screws on the right side and the nuts on the left side (seen facing the cutting rotor). The correct positioning of the bolts will ensure that the blades do not loosen or become unscrewed.



Information:
The nuts are always mounted on the transmission side.

- Give the new blades time to "settle in" during the first work session following a blade change. This means that the blades will take their final place, resulting in the slight loosening of some blades between the blade support plates. **You will need to re-tighten the blade bolts during the first 5 hours of operation. (Torque loading: 25 Nm)**



Caution:
Incorrectly or poorly installed blades may lead to the machine breaking down or being damaged. There is also a risk of injury to the operator and others in the vicinity of the work area.



Caution:
After replacing the blades, always remember to check all the bolts for tightness during the first 5 hours of operation. Failure to do so could have serious consequences for the operator and the machine.

13. Storing the machine



Preparation for storage

- Clean the machine (see § 21.3 Cleaning the machine").
- Perform major maintenance (see § 21.5 Maintenance after 20 hours of operation).
- Check all the nuts and bolts of the machine for correct tightness, retighten them if necessary. To check most bolts, always take two 10, 13 and 17 wrenches as well as 4, 5 and 6 Allen keys.
- Empty the petrol tank. You can do this simply by running the machine until it runs out of fuel. If necessary, use a syphon pump to return the fuel to a jerry can (see safety instructions in §10.2 Adding fuel).
- Disconnect the spark plug cap (see §12.5.2 Checking or replacing the spark plug). Spray MoS2-based graphite oil through the spark plug hole into the combustion chamber. Pull the handle of the starter until the piston is in the up position. Then replace the spark plug.
- Touch up or lubricate areas where the paint coating has disappeared, to prevent rusting. Original ELIET paints in the same colour are available from your ELIET Dealer (article no.: BX 043.200.400).
- Always allow the machine to cool down before storage.
- If the machine is to be stored outside, it must be well protected with a tarpaulin. Try to avoid allowing the machine to be exposed to bad weather. At ELIET, we strongly recommend a sheltered storage area.
- Keep the machine out of the reach of children.
- Never place the machine in direct proximity to a heat source or open flame (at least 2 m away).

14. Equipment specifications



Engine	Honda GX270
Engine gross power (W/pk DIN)	9 hp/6.6 kW
Max. branch diameter	60 mm
Number of axe cuts/minute	50,000
Capacity (wheelbarrows of chips/hour)	24
Shredding technique	ELIET Axe principle™
Type of blades	RESIST™ /8.3 (20 st.) (reversible)
Number of blades	20
Noise level	113 dB(A)
Chassis	Steel sheet 2.5 - 3 mm
Feed opening	245 x 250
Feeding height	900 mm
Ejection system	Turbo Discharge™
Ejection height	1,410 mm
Petrol tank	9.5L
Storage dimensions (L x B x H in mm)	1300 x 650 x 1410 mm
Wheel traction (ø x W/material)	4.00 x 8
Wheels	V-belt SPA 1600/XPA1600
Dimensions (L x B x H in mm)	1700 x 650 x 1410 mm
Weight	135 kg

15. EC Declaration of Conformity

Machine: **SHREDDER**
Model: **ELIET MAJOR 4S**
Type: MA 003 013 000
MA 003 013 208
MA 003 021 208
MA 003 014 208
MA 203 021 208

The previously mentioned machine has been designed and manufactured to comply with the following European CE regulations:

"**EN13683/2003 + A2:2011: Garden equipment - Shredders/chippers with internal combustion engine - Safety**"

The ELIET manufacturing company hereby declares that it has conducted a risk analysis, and that it is fully aware of the potential hazards and risks associated with the machine. With this in mind, all necessary measures have been taken in accordance with Machine Directive 2006/42/EC in order ensure the safety of the operator when the machine is used correctly.

To determine the values of the A-weighted and guaranteed sound power levels in accordance with Directive 2000/14/EG, annex III/B 50, the measurement regulations indicated in European Standard EN 13 683:2003 + A2:2011 were followed.

Measured sound power level Lw(A): 112 dB(A)
Guaranteed sound power level Lw(A): 113 dB(A)
Measured sound pressure level Lp(A): 92 dB(A)

Date: 02/2023
Signature:

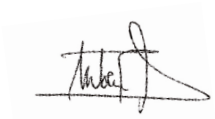

Frederic LIETAER
CEO **ELIET EUROPE NV**

ELIET EUROPE S.A.
Diesveldstraat 2
BE - 8553 Otegem Belgium

Tel. +32 56 77 70 88 - Fax +32 56 77 52 13
info@eliet.eu - www.elietmachines.com

16. Annexes

16.1. A1 Assemble the machine

The machine is not fully assembled when delivered. To complete the assembly, a set of parts and mounting hardware is provided

POS	NAME	DESCRIPTION	QUANT.
1	BQ 341 015 100	SPARE PARTS BAG 100X150	1
2	BZ 201 042 201	MAJOR 4S - ASSEMBLY SHEET	1
3	BS 554 100 625	WOOD SCREWS M6X25 DIN603	4
4	MPA 01 530 430	FLAT REMOVAL NOZZLE ATTACHMENT	2
5	BR 111 060 690	NYLON RING 6/10X6	3
6	BS 532 006 224	BODY WASHER M6X22X2 DIN 440	3
7	BS 502 000 600	NYLON NUT M6 DIN 985	2
8	BS 531 002 000	WASHER M20 DIN 125	2
9	BB 011 000 200	STARLOCK 20 MM	2
10	BS 502 001 000	NYLON NUT M10 DIN 985	1
11	BS 531 001 000	WASHER M10 DIN 125	2
12	BS 511 001 042	SCREW M10X50 DIN 931	1
13	BS 531 001 600	WASHER M6 DIN 125	9
14	BS 511 000 640	SCREW M6X16 DIN 933	4
15	BR 000 910 280	U-PROFILE 28 CM	1
16	BS 512 000 616	SCREW M6X16 DIN 933	4
17	BS 533 000 616	GROER WASHER M6 DIN 127	4
18	BN 530 106 630	ADJUSTABLE HANDLES	1
19	MPA 01 530 700	CLAMPING HANDLE	1

Required tools: 2 x 10 mm wrenches,
2 x 13 mm wrenches, 2 x 17 mm wrenches

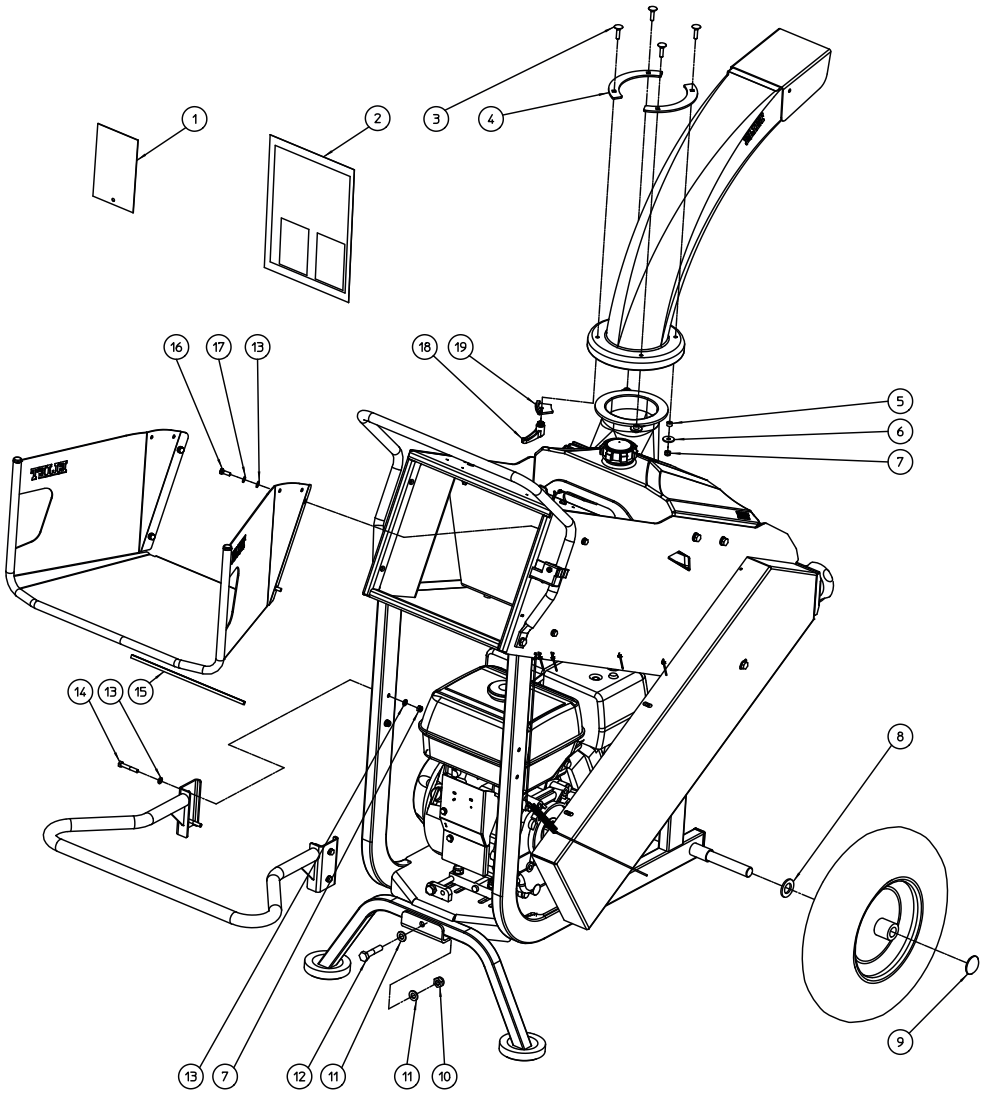

SCALE 1:8

16.2. A2 Assembling/orienting the discharge tarpaulin

The base of the chip removal nozzle is equipped with safety lugs to prevent it from rotating towards the operator. To ensure proper operation, please make sure that this nozzle is assembled as shown in the view on the previous page (page 57 and the drawing below). To change the orientation of the chip removal nozzle, unscrew the adjustable clamping handle (position 19) approximately 1 full turn and then orient the nozzle in the desired direction. The radius of rotation over which the handle can be turned is limited, which is why it is equipped with a "to-and-fro" notching system. If you reach the end of the rotation radius, pull the handle vertically downwards so that the red button in the handle disappears. The lever is then released from its notches and can be turned freely to the beginning of the rotation circle. Allow the lever to move up the handle again so that it engages in the notch again, then resume the rotation. Once the desired nozzle orientation is achieved, tighten the handle firmly to lock it in place and prevent unwanted rotation.

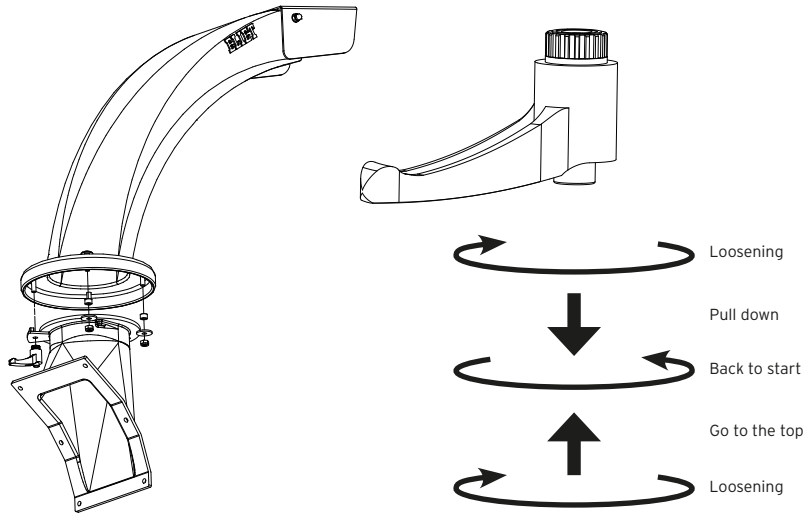



Caution

Make sure that the nozzle rotation limiting guide (position 19) is properly assembled to prevent the nozzle from rotating towards the operator.

16.3. A3 Major 4S PTO version



Caution:
ELIET recommends that the Major 4S PTO should not be used with tractors whose engine power exceeds 20 hp, regardless of the type of drive shaft used.

16.3.1. Safety precautions

- **Long funnel:** the funnel from the Major PTO is extra-long so that the user's hands cannot come into contact with the blades.
- **Protective plate:** behind the Major 4S PTO, there is a protective plate that ensures that the operator cannot reach the blades with his hands if the machine is connected to the tractor.

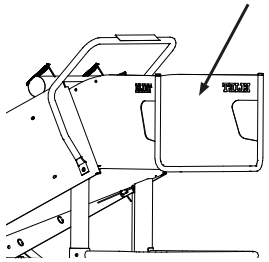

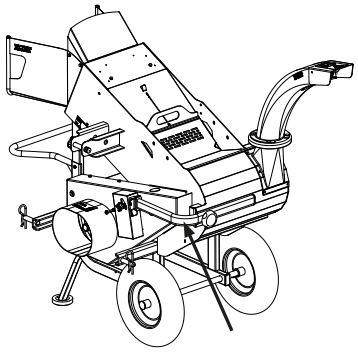

16.3.2. Connecting propeller shaft

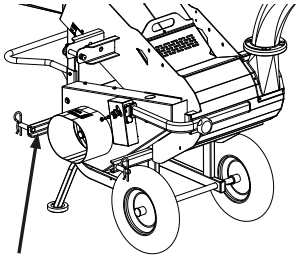

- Make sure that the turbine is completely free of clippings and that the blade axle can turn without obstruction.
- Ensure that the protective plate of the Major 4S is closed and clicked shut. If the protective plate is not secured, the propeller shaft cannot be secured to the major.
- Connect the tractor to the major's 3-point connector. The machine can only be used if all three points are secure.
- Use the upper connection of the 3-point connector to adjust so that the major hangs flat.
- The white ring on the propeller shaft's connection slides back. Until the propeller shaft has been clicked into place, it has not been connected properly.
- If the major is connected to a tractor with a capacity greater than 20 hp, use a propeller shaft with a slip coupling. ELIET is not responsible for damage to the machine as a result of using a tractor with an excessive output capacity.

16.3.3. Using the machine

- The Major 4S PTO runs at a PTO speed of 540 rpm. Eliet is not responsible for damage to the machine if excessive PTO speed is used.
- Set your tractor's accelerator so that the revolutions are 540 RPM.
- Set de machine flat on the ground before starting. The major may not be used in transport mode.
- Direct the blow chute to the desired position before beginning to cut. Do this by dismantling the blow chute (see annex A2, page 59) and then installing in the desired position.
- If you hear a strange noise, when there is a blockage or during other unforeseen circumstances, the propeller shaft must be switched off immediately.

16.3.4. Maintenance Major PTO

- During maintenance work, the propeller shaft must always be disconnected; this is also a requirement in order to remove the protective plate and access the clippings chamber.

Belts tension adjustment

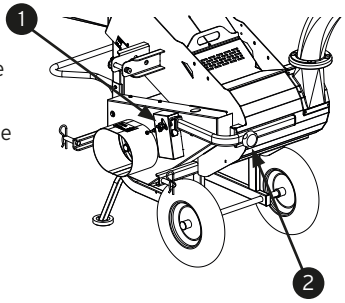

- In order to adjust the belts tension, the protective plate must be adjusted. Unhitch the lever (1) and undo the star-screw (2) on the protective plate in order to release the protective plate.
- The protective guard must also be removed. To do so, the 4 M6 bolts (without nut) must be unscrewed. The cap is also fixed to the chassis with an M6 bolt which has a cap nut and an M8 bolt at the front of the cap. Two ring spanners (10 mm and 13 mm) are required for this.
- In order to check the exact belt tension, please refer to the method explained in § 12.5.5 "adjusting the belt tension", page 46.

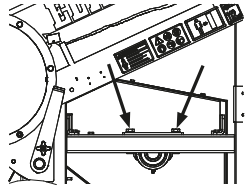

- Tension the belts by sliding the flat plate on the chassis forwards.
- The plate bolts must be unscrewed in order to do so (2 x ring spanners 13).
- Before unscrewing the machine, a felt-pen must be used to make two points on the chassis plate. This will save time afterwards when lining up the pulleys.
- If the correct tension and alignment is achieved, the plate can be locked by re-tightening the bolts (M8) (2 x ring spanner 13).
- Only once everything has been checked carefully can the protective cap be replaced in its original position.
- Replace the protective plate and tighten the button on the back sufficiently to avoid overloading the coupling mechanism.

16.4. A4 List of tightening torques

16.4.1. Bolt head according to DIN 931, 912

		Thread 8.8	Resistance 10.9
Normal thread	M4	3.0	4.4
	M5	5.9	8.7
	M6	10	15
	M8	25	36
	M10	49	72
	M12	85	125
	M14	135	200
	M16	210	310
	M18	300	430
	M20	425	610
	M22	580	820
	M24	730	1050
	M27	1100	1550
	M30	1450	2100
Fine thread	M8 x 1	27	35
	M10 x 1.25	52	69
	M12 x 1.5	89	130
	M14 x 1.5	145	215
	M16 x 1.5	225	330
	M18 x 1.5	340	485
	M20 x 1.5	475	680
	M22 x 1.5	630	900
	M24 x 2	800	1150
	M27 x 2	1150	1650
	M30 x 2	1650	2350

(friction factor μ = 0.14)

16.5. A5 Risk analysis

Below you will find a list of dangers and risks that are linked to storing away, transporting or using the shredder. Take note of these dangers and avoid these risks by following the instructions contained in this manual. Be aware that it is not just the user who runs a risk but also third parties can be exposed to these risks. Ensure that bystanders are always kept at a safe distance.

- Injury to hands due to reaching into the infeed opening past the anti-projection flaps.
- Injury due to the projection of chippings through the feed-in opening because the anti-projection flaps have been pressed open.
- Danger of suffering heavy injuries or death because a machine part (blades, bolts, etc.) have become loose because there has been a lack of checking and maintenance or after an incorrect intervention.
- Danger of suffering injuries following projection by the feed hopper and removal nozzle after a foreign object has been introduced (stone, metal, textile, PVC, etc.).
- Injury from chips being thrown out of the removal nozzle while a machine is in operation.
- Injury due to the projection of chippings by walking into the danger zone around the blow chute.
- Cutting injuries to hands due to injury from the blade shaft coasting to a stop on opening the chipping chamber.
- Cutting injuries to hands when disassembling the blade shaft.
- Strangulation due to a scarf or foulard or loose clothing getting caught in the machine.
- Injuries caused by the machine tipping due to unsafe transport.
- Risk of fire due to chippings and wood residue that is blocking the cooling air ducts of the engine.
- Respiratory system irritation or pulmonary problems due to inhaling dust released by the machine.
- Hearing disorders due to insufficient protection of the ears during the work.
- Bruising or injuries when feeding hard or very dry materials, due to the power of the blades on the wood.
- Bruising or injuries due to the kick-back of wood when being introduced in the feeding hopper.
- Mental disturbance or rheumatic disorder due to shredding for a long time at a time without taking breaks.
- Joint pain due to vibration transfer when continuously inserting thick branches.
- Injury due to contact with the blades or removal propeller during unblocking, releasing, maintenance or cleaning.
- Injury due to a fall while driving over a substrate that cannot carry the weight of a person and machine.

This is not a comprehensive list and is for information purposes only to safeguard the safety of the user.

16.6. A6 Warranty conditions

Dear Customer,

We thank you for purchasing an ELIET product. Congratulations on your purchase of this machine which is sure to meet your expectations and needs over the coming years. At ELIET, we do everything to ensure that our products function correctly. That is why your product qualifies for a two-year warranty.

16.6.1. What is the warranty?

The design and manufacturing processes for ELIET products are subject to very strict quality regulations. The purpose of these regulations is to guarantee a long service life and permanent safety. That is why at ELIET, we are willing to repair at no charge hidden defects or faults during the whole run-in period (aka the warranty period), provided the prescribed procedure is followed.

16.6.2. Warranty conditions

ELIET's warranty obligation for new machines is governed by the following conditions.

I. Warranty period

The warranty period begins on the day the dealer delivers the machine to the customer (maximum one week after the purchase) and expires:

- after two years of private use.
- after twelve months or 100 running hours of rental use.
- after twelve months or 100 running hours in semi-professional or in professional use.

To be eligible to obtain warranty the customer is invited to register the newly purchased machine with ELIET. You are required to complete the registration form on the website: **www.elietmachines.com** If you do not have Internet access, please fill out the attached registration card and send it back to ELIET.

II. What is not covered by the warranty?

- Wear items are not covered by the warranty conditions: (such as blades, bearings, belts, chains, gearwheels, tyres, bulbs and fuses).
- If failures are found to be caused by improper use, neglect or consequential damages by an external source (fall, chippings, foreign objects, accident).
- If failures are found to be caused by improper maintenance of the machine, that is not in accordance with the prescribed periodic maintenance.
- **Defects caused by improper repair done by anyone other than an authorised ELIET dealer** or after using non-original ELIET replacement parts.
- When the defect is caused by making improper changes to the original design of the machine.
- When the fault develops when the machine has been used not in accordance with the instructions contained within this manual.
- When the prescribed warranty procedure has not been adhered to or when the warranty period has expired.
- For all problems linked to the engine, please contact an authorized service centre of the engine manufacturer.

III. Procedure

- **Step 1**: **On the day of purchase**, the customer will register their purchase online by completing the registration form at **www.elietmachines.com or by sending the hand-written registration card to ELIET**. The customer will keep the purchasing invoice until the warranty period has expired.
- **Step 2**: In the event of a defect becoming apparent, the customer shall have their machine verified by the authorized ELIET dealer. If the dealer feels that there is a factory defect, the dealer may invoke the warranty, under the terms specified.
- **Step 3**: Every warranty claim must be accompanied by a fully-completed official claim form. Distributors can obtain these forms from ELIET or an ELIET importer/agent, or complete an online warranty application via their dealer area.
- **Step 4**: The dealer shall then order the replacement parts needed to perform the repairs. Next, the dealer sends the order form for the parts requested under the warranty, together with the completed **warranty claim form and a copy/proof of registration.**
- **Step 5**: The warranty claim form must be attached to the purchase invoice and sent to ELIET or to an ELIET importer/agent.
- **Step 6**: ELIET will send the parts ordered to the dealer under the regular delivery and payment conditions.
- **Step 7**: The defective parts will be examined by the technical department first prior to approving or rejecting the warranty. ELIET reserve the right to solely decide whether or not the customer has complied with the conditions for the validity of this guarantee, i.e. 1 year or 2 years. The defective components will be returned to ELIET and become its property.
- **Step 8**: When a warranty claim is found to be valid, ELIET will credit the warranty parts. The cost of labour is not covered by ELIET.

IV. In the event of damage due to transport

- All goods are considered purchased as of the moment they leave the factory. Risks related to transport are to be borne entirely by the dealer customer. It follows, that ELIET highly recommends that the dealer customer check the goods for damage on arrival.
- Any damage that has been noticed must be reported on the delivery invoice before it is signed. Make sure that the driver of the carrier also signs this damage report on your copy of the delivery invoice.
- The insurance company will not accept any liability if there is no written and signed declaration of damages on the delivery invoice.
- Damages can be claimed from the hauler using a copy of the delivery form and a covering letter stating your complaint.
- The damaged machine should be kept in its original condition until the hauler's insurer has performed any examination.

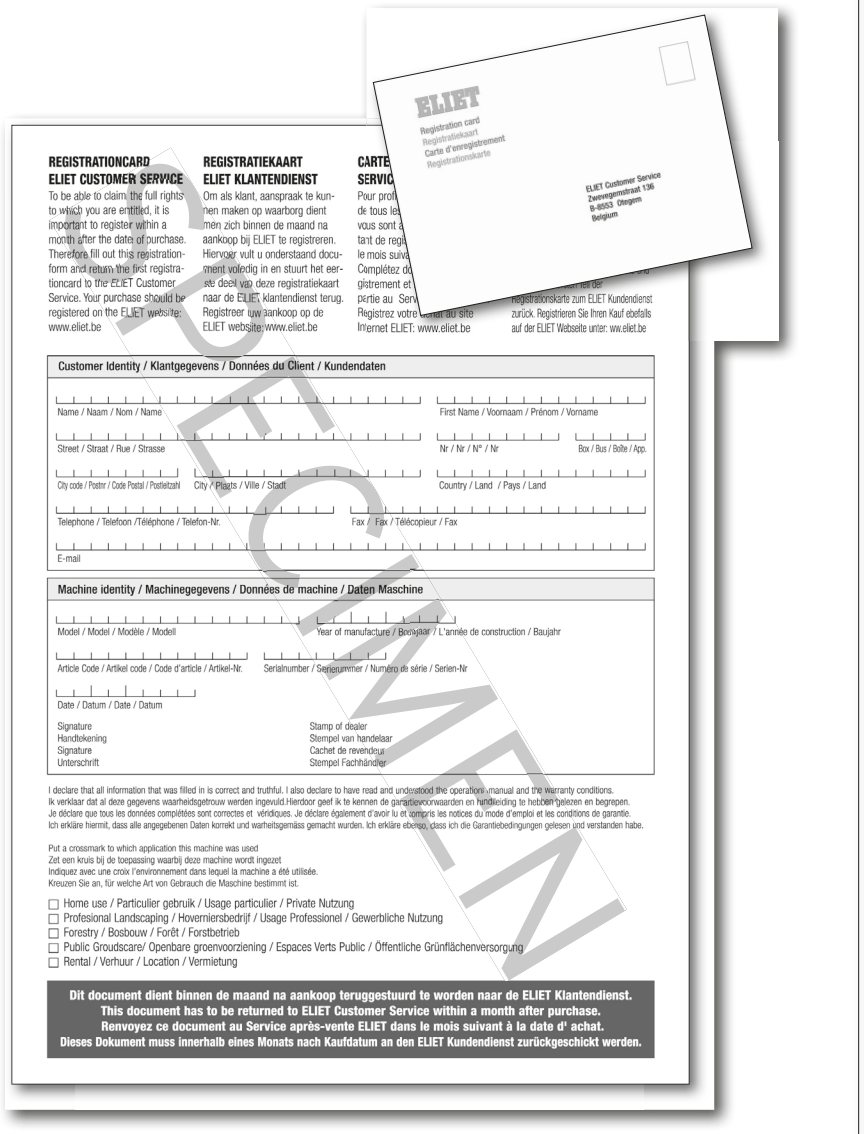
ELIET
Registration card
Registratiekaart
Carte d'enregistrement
Registrationskarte
ELIET Customer Service
Zwevegemstraat 136
B-8553 Otegem
Belgium
REGISTRATIONCARD
ELIET CUSTOMER SERVICE
To be able to claim the full rights to which you are entitled, it is important to register within a month after the date of purchase. Therefore fill out this registration-form and return the first registra-tioncard to the ELIET Customer Service. Your purchase should be registered on the ELIET website: www.eliet.be
REGISTRATIEKAART
ELIET KLANTENDIENST
Om als klant, aanspraak te kun-nen maken op waarborg dient men zich binnen de maand na aankoop bij ELIET te registreren. Hiervoor vult u onderstaand docu-ment volledig in en stuurt het eer-ste deel van deze registratiekaart naar de ELIET klantendienst terug. Registreer uw aankoop op de ELIET website:www.eliet.be
Internet ELIET: www.eliet.be
zurück. Registrieren Sie Ihren Kauf ebefalls
auf der ELIET Webseite unter: ww.eliet.be
Customer Identity / Klantgegevens / Données du Client / Kundendaten
Name / Naam / Nom / Name
First Name / Voornaam / Prénom / Vorname
Street / Straat / Rue / Strasse
Nr / Nr / N° / Nr
Box / Bus / Boîte / App.
City code / Postnr / Code Postal / Postleitzahl
City / Plaats / Ville / Stadt
Country / Land / Pays / Land
Telephone / Telefoon /Téléphone / Telefon-Nr.
Fax / Fax / Télécopieur / Fax
E-mail
Machine identity / Machinegegevens / Données de machine / Daten Maschine
Model / Model / Modèle / Modell
Year of manufacture / Bouwjaar / L'année de construction / Baujahr
Article Code / Artikel code / Code d'article / Artikel-Nr.
Serialnumber / Serienummer / Numéro de série / Serien-Nr
Date / Datum / Date / Datum
Signature
Handtekening
Signature
Unterschrift
Stamp of dealer
Stempel van handelaar
Cachet de revendeur
Stempel Fachhändler
I declare that all information that was filled in is correct and truthful. I also declare to have read and understood the operations manual and the warranty conditions.
Ik verklaar dat al deze gegevens waarheidsgetrouw werden ingevuld.Hierdoor geef ik te kennen de garantievoorwaarden en handleiding te hebben gelezen en begrepen.
Je déclare que tous les données complétées sont correctes et véridiques. Je déclare également d'avoir lu et compris les notices du mode d'emploi et les conditions de garantie.
Ich erkläre hiermit, dass alle angegebenen Daten korrekt und warheitsgemäss gemacht wurden. Ich erkläre ebenso, dass ich die Garantiebedingungen gelesen und verstanden habe.
Put a crossmark to which application this machine was used
Zet een kruis bij de toepassing waarbij deze machine wordt ingezet
Indiquez avec une croix l'environnement dans lequel la machine a été utilisée.
Kreuzen Sie an, für welche Art von Gebrauch die Maschine bestimmt ist.
Home use / Particulier gebruik / Usage particulier / Private Nutzung
Profesional Landscaping / Hoveniersbedrijf / Usage Professionel / Gewerbliche Nutzung
Forestry / Bosbouw / Forêt / Forstbetrieb
Public Groudscare/ Openbare groenvoorziening / Espaces Verts Public / Öffentliche Grünflächenversorgung
Rental / Verhuur / Location / Vermietung
Dit document dient binnen de maand na aankoop teruggestuurd te worden naar de ELIET Klantendienst.
This document has to be returned to ELIET Customer Service within a month after purchase.
Renvoyez ce document au Service après-vente ELIET dans le mois suivant à la date d' achat.
Dieses Dokument muss innerhalb eines Monats nach Kaufdatum an den ELIET Kundendienst zurückgeschickt werden.
SPECIMEN

BZ 201 042 003