ELIET®

MANUAL

Vector 4S



This booklet provides information about the actual use and maintenance of the machine. **Read it carefully and keep it in a safe place.**



Please also keep your purchasing invoice **and/or proof of receipt** together with this booklet.



Register your purchase online at **www.elietmachines.com**

© ELIET
Copyright 2022 ELIET. All rights reserved. All textual material, drawings, illustrations, diagrams, graphs, etc., included in this ELIET booklet are protected by copyright and also by other intellectual property rights. None of this information may be copied for commercial purposes or distribution and/or changed or reposted for other purposes. Certain sections of this manual are also protected by ELIET supplier copyright.

1. Introduction



1.1. Carefully read this user manual

ELIET machines are designed for safe and reliable use, if they are operated in accordance with the instructions provided. Carefully read these operating instructions before using the machine. Failure to do so may result in personal injury or damage to the equipment.

1.2. Identification data – ELIET Vector 4S

Write the identification data of your machine in the boxed areas:

ELIET product code:	
Serial number:	
Year of manufacture:	
Purchase date:	

2. Warranty



2.1. Registering your machine

To make a warranty claim, you will need to register your machine online within one month of purchase on: **www.eliet.eu / www.elietmachines.com**

European customers:
ELIET EUROPE NV
Diesveldstraat 2
8553 Otegem
T (+32)(0)56 77 70 88 - **F** (+32)(0)56 77 52 13
Email: service@eliet.eu

U.S. customers:
ELIET USA Inc.
19 E Moreland Ave
Philadelphia, PA 19118
Ph +1 412 367 5185 - **Fax** +1 412 774 1970
Email: usinfo@elietusa.com
www.elietusa.com

Read the warranty conditions under “16.5 Warranty-conditions”, page 84

3. Welcome



Welcome to the family of ELIET customers.
We would like to thank you for the confidence that you have placed in ELIET. We are convinced that you have purchased the very best machine. The operating life of your ELIET machine depends a great deal on how you care for your machine. This user manual and the engine manual provided will assist you in this respect. If you follow the instructions and suggestions in these manuals, your ELIET machine will operate for a very long time in optimal condition.
Read this instruction manual carefully before operating this machine. This will prevent you from operating the device incorrectly.
It is also in your best interest to carefully read the chapter specific to safety instructions. Even if you are thoroughly familiar with operating such equipment, it is still advisable to read these pages carefully.

At ELIET all our machines and devices are subjected to a policy of continuous change and therefore, the specification of your machine may differ slightly in terms of shape, technology and accessories.
The descriptions and technical data in this manual are accurate at the time of printing. Certain illustrations and descriptions may not be applicable to your specific machine, but instead relate to a different version of the machine. In turn, we trust that you will understand that the texts and illustrations in this manual cannot lead to any claims.
If you still have any questions after you have read this manual, we request you to contact your **ELIET** dealer.

ELIET AT YOUR SERVICE

European customers GMT +1 : from 08:00 to 12:00 and 13:00 to 17:00

Diesveldstraat 2
8553 Otegem
Belgium

Tel : (+32) (0)56 77 70 88
Fax: (+32) (0)56 77 52 13
service@eliet.eu

ELIET®

Warning



OPERATING FORESTRY, PARK AND GARDEN POWER EQUIPMENT

Under the laws of several countries and states, it is unlawful to operate an internal combustion engine that uses hydrocarbon fuels on any forest-covered, brush-covered or grass-covered land or on land where grain, hay or any other flammable agricultural crop is grown without a properly functioning spark arrestor.

Like with most outdoor power equipment, the engine in your power equipment is an internal combustion engine that burns petrol, a hydrocarbon fuel. Therefore, your power equipment must be equipped with a spark arrestor muffler that is in continuous, effective working order. The spark arrestor must be attached to the engine exhaust system in such a way that flames are prevented from escaping the system and from coming into contact with flammable material.

Failure on the part of the owner/operator of the machine to comply with this regulation is a misdemeanour under certain law (e.g. Californian Law), and may also be a violation of other national and/or federal regulations, laws, ordinances, or codes. Contact your local chief fire officer or forest ranger for specific information about the applicable regulations in your area.

The standard muffler installed on ELIET machine engines is not equipped with a spark arrestor. One must be added before operation if the machine is to be used in an area where a spark arrestor is required by law. Please contact your local authorities to find out if these laws apply to you. Please contact your authorised dealer to learn more about the spark arrestor options that are available to you.

4. Table of Contents

1. Introduction 3
1.2. Identification data – ELIET Vector 4S 3
3. Welcome 5
4. Table of Contents 7
5. Safety symbols 10
5.1. For your information 10
5.2. Caution 10
5.3. Warning 10
6. Main parts 11
7. Safety regulations 14
7.3.2. Careful and sensible use 21
7.3.3. Responsibilities of the operator 22
7.3.4. Personal Protective Equipment (PPE) 22
7.3.5. Danger zones 23
7.3.6. Regular maintenance 24
7.3.7. Respect the environment 24
8. Dealer obligations 25
9. Operating instructions 26
9.1. Preliminary checks 26
9.3. Preparing the work area 28
9.4.2. Turning off the engine 30
9.5. Moving the machine 31
9.6. Working with the machine 34
9.6.2. Turning and positioning the blow chute and deflector flap 35
9.7. Cleaning the machine 40
10. Transporting the machine 41
11. Maintenance tasks described in detail 43
11.1. General 43
11.2. Miscellaneous interventions 44
11.2.1. Removing the belt cover 44
11.2.2. Removing the chain guard. 44
11.2.3. Opening the shredding chamber 45
11.2.4. Setting the blow chute to the working or transport position 46
11.2.5. Manually lifting and locking the feed roller 46
11.3. Engine maintenance 48
11.3.1. Checking engine oil level + refilling 48
11.3.2. Draining the engine oil 49
11.3.4. Replacing the air filter 50
11.3.5. Replacing the hydraulic oil and the filter (Vector PRO, CC, OW) 51

11.4. Machine maintenance 52
11.4.1. Routine inspection of the blades 52
11.4.2. Sharpening the blades 55
11.4.3. Turning and replacing a blade 57
11.4.4. Motor axle drive belt tension 61
11.4.5. Checking and adjusting the tension of the tracks (Cross Country model) 67
11.4.6. General lubrication 69
11.4.7. Lubrication of pivot points and friction surfaces 69
11.4.8. Lubricating using the grease zerks 71
11.4.9. Lubricating the bearings 72
11.4.10. Lubricating the chain and cogs 72
11.5. Maintenance schedule 73
11.5.1. Special maintenance 74
11.5.2. Daily maintenance 76
11.5.3. Maintenance after 5 hours 76
11.5.4. Maintenance after 10 hours 76
11.5.5. Maintenance after 20 hours 78
11.5.6. Maintenance after 50 hours 78
11.5.7. Maintenance after 100 hours (or every six months) 78
11.5.8. Maintenance after 200 hours (or annually) 79
11.5.9. Maintenance after 500 hours (or annually) 79
12. Storing the machine 82
13. Option 83
14. Equipment specifications 84
15. EC Declaration of Conformity 86
16. Annexes 87
16.1. Specifications for lubricants and fuel 87
16.3.1. Blade axle becomes blocked 89
16.3.2. Engine cuts out 89
16.3.3. The engine does not start 89
16.3.4. Reduction in power 89
16.3.5. Wheel drive/tracks do not function when gas engine is running (Vector 4S ON WHEELS, CROSS COUNTRY) 90
16.3.6. The feed roller does not respond (Vector 4S PRO, ON WHEELS, CROSS COUNTRY) 90
16.3.7. The engine cut out and the machine must be moved (Vector 4S OW) 90
16.4. Warranty conditions 91

5. Safety symbols

Certain symbols in this manual are used to provide additional information and to draw your attention to potential risks.







5.1. For your information



This symbol is used to draw your attention to specific information and/or actions, or to denote where you can find additional information relating to the subject.

5.2. Caution



This notice identifies safe usage habits. This will allow you to avoid any incorrect actions that could lead to bodily injury or material damage.

5.3. Warning



This notice is used to warn you about extreme danger that you must be aware of in these specific circumstances. So, remain alert, in order to ensure your own safety.

6. Main parts

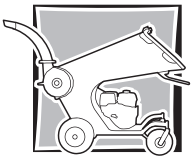

To fully understand the content of this operator's manual, you need to be fully conversant with the terminology used in the descriptions. In this chapter you can find a set of parts identified by name. It is a good idea to take time to study the machine beforehand for an improved understanding of the descriptions provided in this user manual.

1. Emergency stop button
2. Feed hopper
3. Emergency stop bar
4. Feed roller controls
5. Petrol tank filler cap
6. Engine On/Off button
7. Feed crankcase

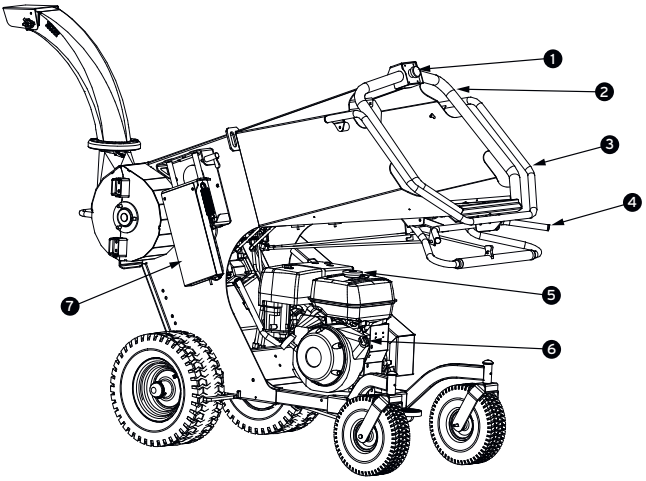

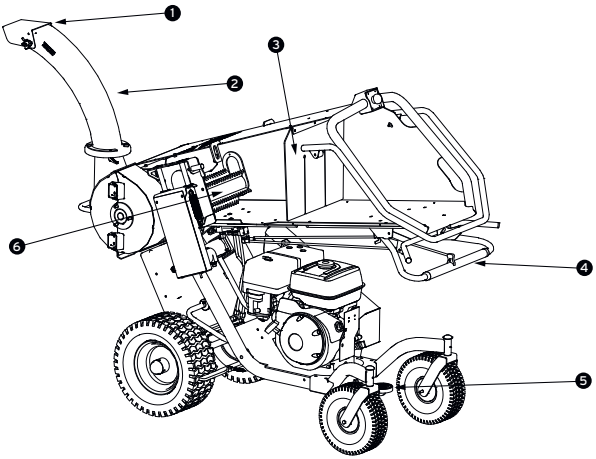

1. Deflector cap
2. Blow chute
3. Anti-projectile shield
4. Control panel
5. Brake pedal
6. Feed roller

1. Blade support/axle
2. Ejection turbine
3. Maintenance hatch
4. Oil tank
5. Belt cover
6. Hydraulic regulator (optional)
7. Exhaust
8. Anchor eyelets

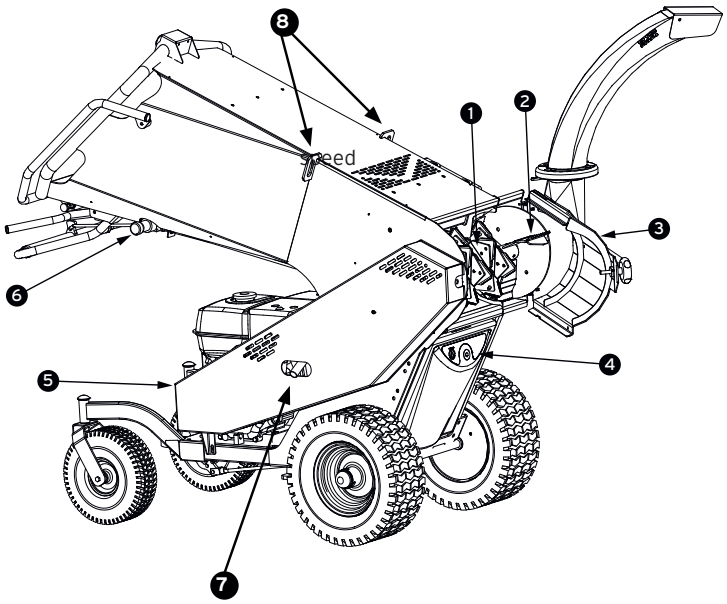

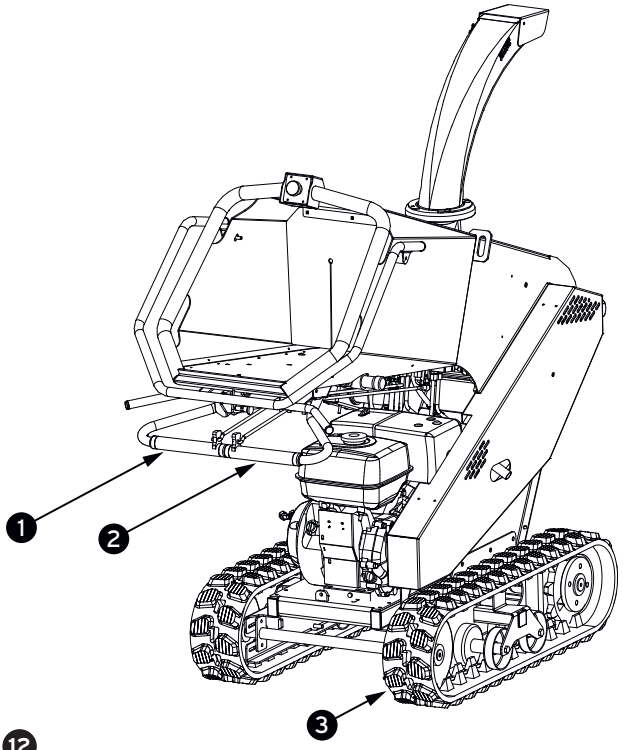

Cross-Country

1. Left track drive
2. Right track drive
3. Track

This symbol is used to draw your attention to specific information and/or actions, or to denote where you can find additional information relating to the subject.

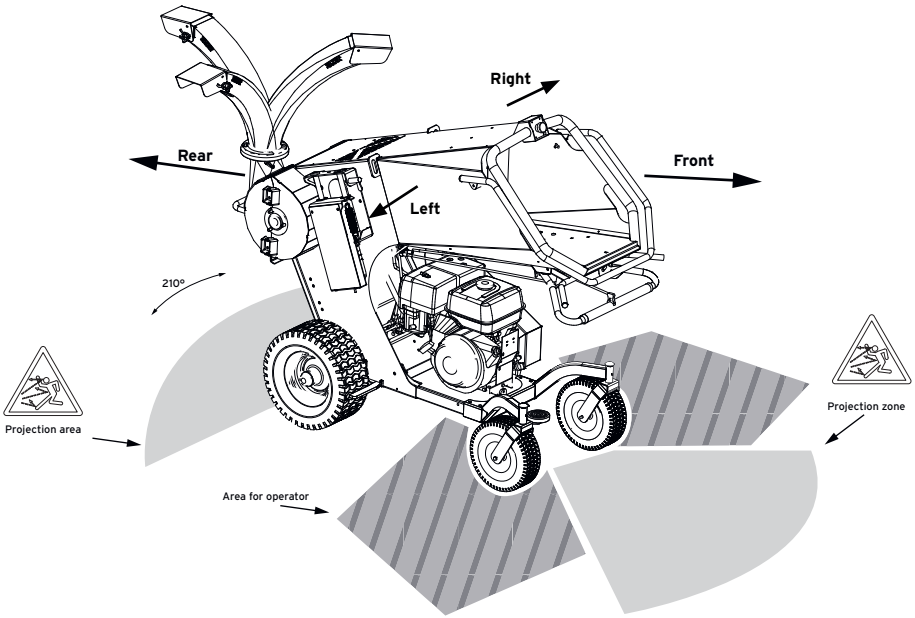

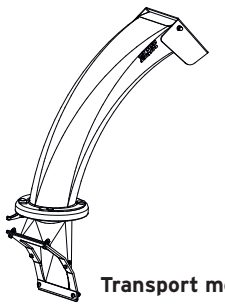

Transport mode

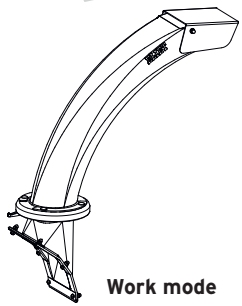

Work mode

Your ELIET dealer is at your service, ready to provide you with maintenance or advice so that your ELIET machine always remains in optimal condition. You can contact him for genuine ELIET service parts and lubricants. These service parts are manufactured to the same stringent accuracy requirements and standard of craftsmanship as the original equipment.

For your safety, use only genuine ELIET parts on ELIET machines.

7. Safety regulations

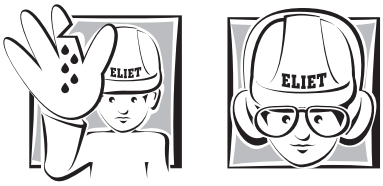

7.1. Safety messages

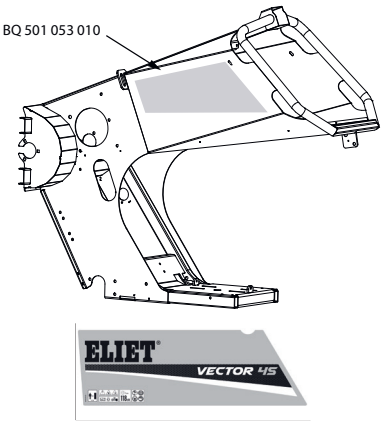

sticker summarising the general safety instructions in the form of icons:
You are to read and fully understand the instruction manual before working with the machine. Always wear the appropriate protective gear while operating the machine (gloves, safety goggles, hearing protectors).
The sticker is a reminder to keep anyone present at a safe distance (10 m).

The inscription indicates the guaranteed A-weighted sound power level (Lw(A)) emitted by the machine under standard conditions. (118 dB)
(Item code: BQ 501 053 010)

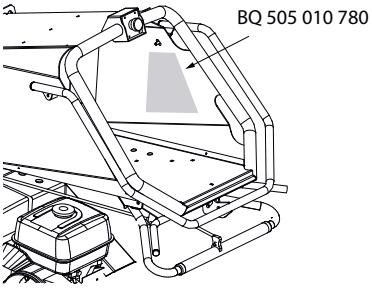

Likewise, the sticker located on the inside right side of the hopper highlights the risk of cutting one's hands and being pulled into the hopper. These two risks are inherent to the shredding of wood, but the presence of the anti-projectile shield ensures the maximum reduction of both. Wearing gloves is mandatory, and you must never place your legs into the hopper or climb into it.

(Item code: BQ 505 010 780)



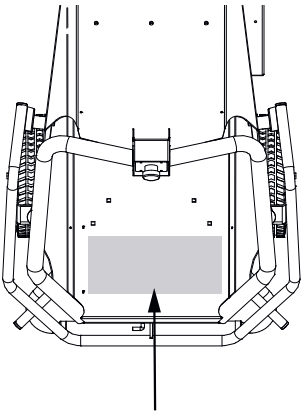

BQ 505 010 110

The sticker located on the feed opening is a reminder that, under no circumstances, should the operator place their hands beyond the transparent anti-projectile shield.
(Item code: BQ 505 010 110)



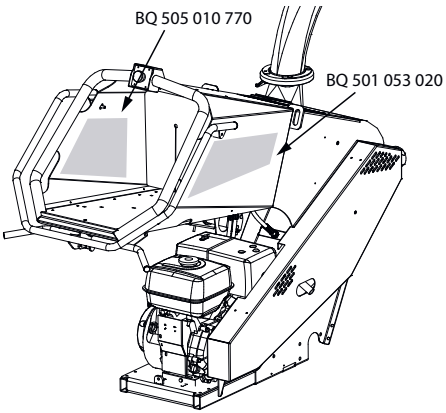

The sticker located on the inside left side of the hopper indicates the maximum diameter of a branch that can be shredded, and also that it is mandatory for anyone standing within 10 metres of the machine to wear safety goggles while the internal combustion engine is running. Projectiles are a constant risk.
(Item code: BQ 505 010 770)



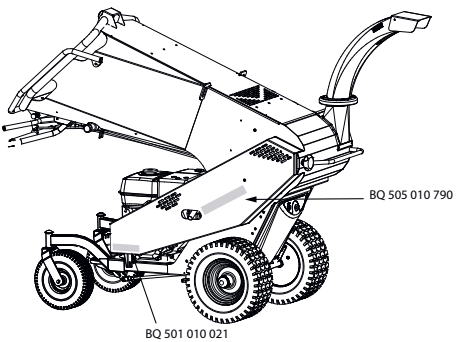

This sticker located on the trapezoidal chain guard indicates that a belt or a chain is found behind the panel. The machine is never to be operated with the safety guard removed. Before any interventions on the machine, please carefully read the maintenance manual. You must wait a minimum of 1 minute after shutting off the machine to make sure that all moving parts have completely stopped before undertaking any interventions.



The sticker located on the trapezoidal chain guard towards the engine exhaust pipe indicates a risk of burning oneself in this area.
(Item code: BQ 505 010 790)

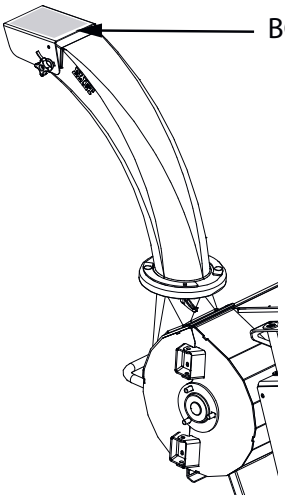

This sticker is located on the deflector flap and contains a warning related to the risk of injury that could occur if you are standing within the shredding projection zone while the internal combustion engine is running.
(Item code: BQ 505 014 100)



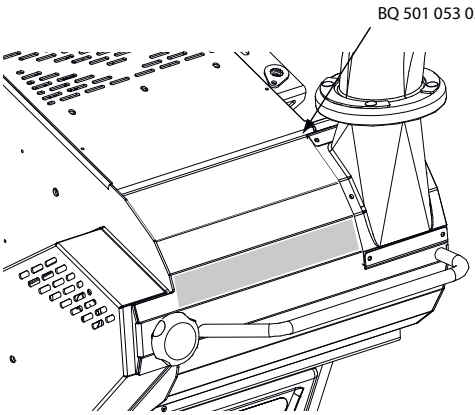

This sticker, located on the shredding chamber, warns the operator of the danger of either catching or cutting their fingers while opening the hatch. It is imperative that you turn off the internal combustion engine and ensure that the blade axle has completely stopped turning. Never place your hands in the blow chute.***(Item code: BQ 501 053 030)***



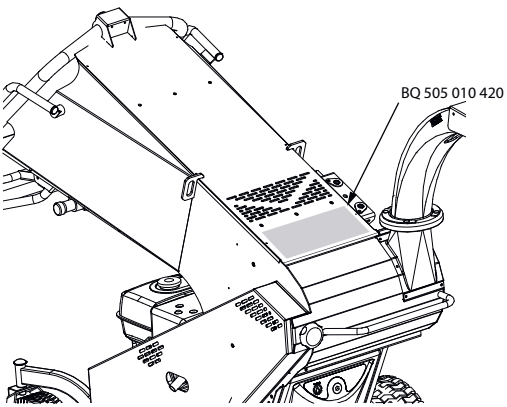

This sticker, located on the hopper, is a reminder to the operator to check the tightness of the bolts that attach the blades to the axle 5 hours after having terminated an intervention and when commissioning a new machine (either changing or turning the blades). You must wear protective gloves and read the maintenance manual, use the appropriate keys and verify that the internal combustion engine has fully stopped running before undertaking any interventions.
(Item code: BQ 505 010 420)



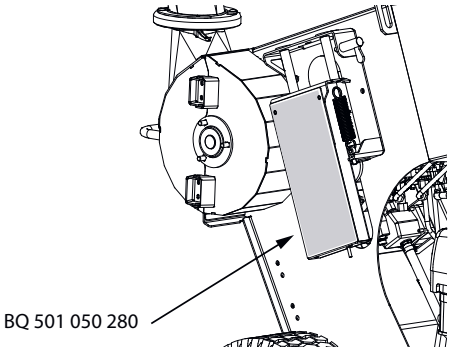

The upright sticker located on the mechanism crankcase supporting the feeder displays the risk of pinching and crushing, and that the user must keep all sensitive parts away from this device. This sticker on the feeder mechanism crankcase also indicates the presence of a hidden chain. The machine is never to be operated with the safety guard removed.
(Item code: BQ 501 050 280)



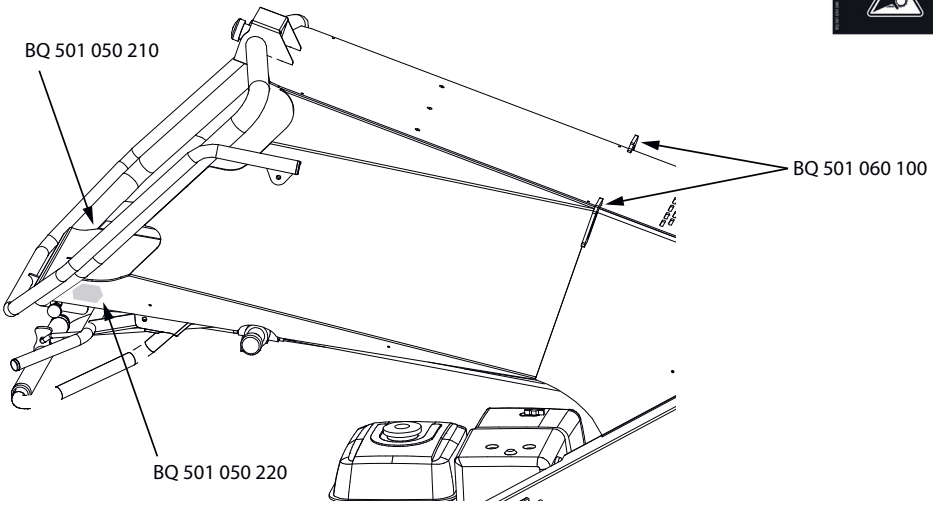

This sticker indicates the location of the eyelets for proper lifting of the machine.
(Item code: BQ 501 060 100).



The stickers on the left and right of the hopper indicate which direction to turn the feed roller control.***(Item code: BQ 501 050 210 & BQ 501 050 220).***

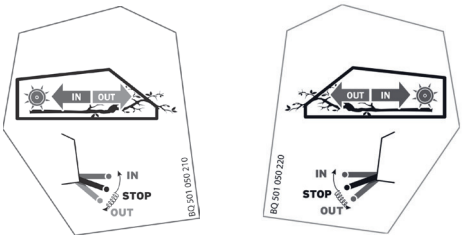

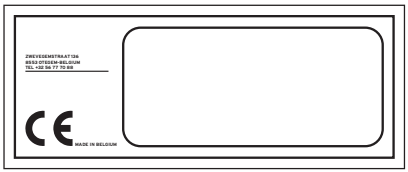

This sticker is located on the oil filter sheet. It contains all identification data for your machine: model, model number, serial number, year of manufacture, engine, power rating, weight, guaranteed A-weighted sound power level (Lw(A)).

This sticker also lists the manufacturer's details. The CE label also indicates that the machine complies with the current European Directive.

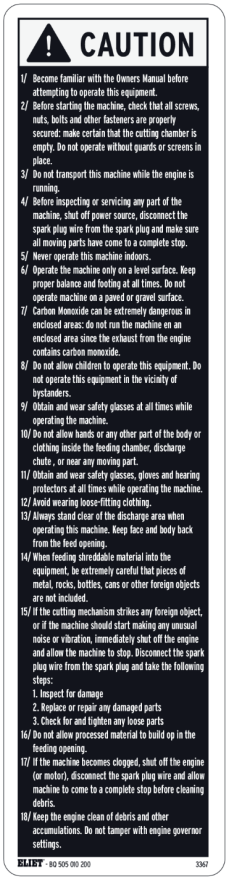

The following stickers apply exclusively to machines sold on the American market

◄ This sticker summarises a number of important safety messages taken from the instruction manual in 18 points. Caution: This of course does not relieve the operator of the obligation to read the instruction manual.
(Item code: BQ 505 010 200)

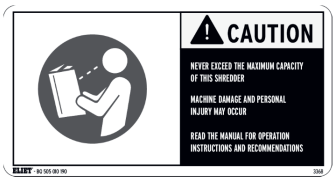

◄ This sticker is located on the feeding hopper at the infeed opening. It reminds the user to operate the unit observing the stated capacity.
(Item code: BQ 505 010 190).



◄ This sticker is located near the engine starter mechanism. Each time the operator goes to start the machine, they are reminded to inspect and service the blades regularly before turning on the machine
(Item code: BQ 505 010 250).

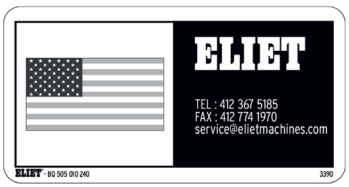

◄ This sticker is found next to the identification sticker. It contains the phone number that American customers can call in the event of a problem.
(Item code: BQ 505 010 240).

7.2. Safety features

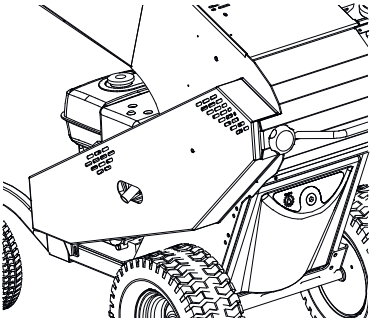

Safety contactor

The safety contactor installed for the maintenance hatch of the blade axle and the "Turbo Discharge" prevents any contact with rotating parts. This maintenance hatch opens without the need for tools. When it is opened, the safety contactor turns off the engine. The engine can only be restarted once the maintenance hatch has been closed properly.

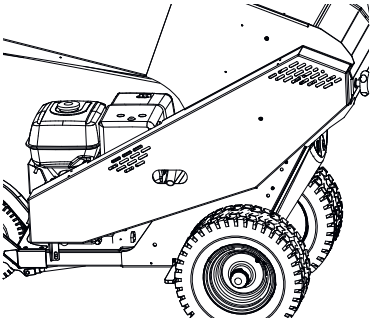

Protective belt cover:

These provide protection against the potential hazards created by rotating belts. They can only be removed with the use of tools. If the belt covers have been removed or are not fitted correctly, starting the machine is strictly prohibited given the potential safety hazards.

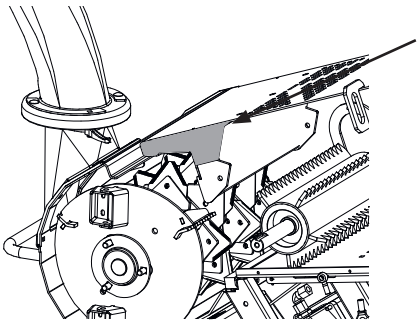

Sound

The enclosure housing the blade axle absorbs the noise created by shredding, which in turn reduces the noise pollution to which the operator and their surroundings are exposed.

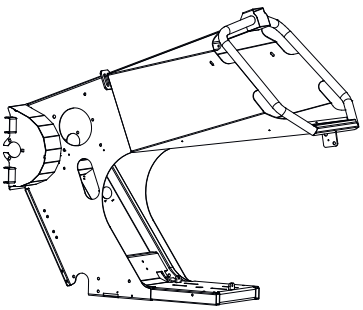

Rugged construction

Sturdy construction provides a guarantee of endurance for ELIET machines and is also a guarantee of user safety in the event of unexpected occurrences.

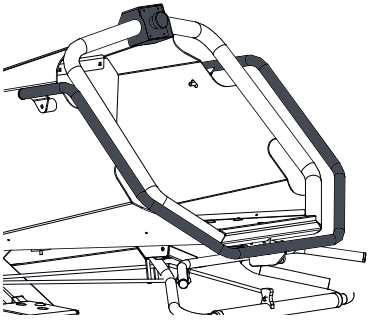

Emergency stop bar and button

The emergency stop button completely stops the engine. (as for the Vector 4S STD, the bar and the button stop the engine).

Resetting

- Emergency stop button: turn the button one quarter turn, pull the button, and restart the engine.
- Emergency stop bar: Pull on both the bolt under the hopper and on the emergency stop bar.

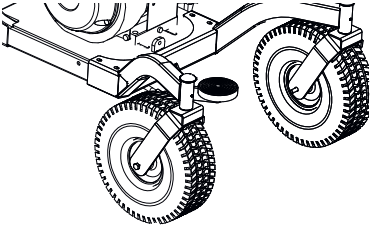

Parking brake models STD, PRO, ON WHEELS

The parking brake ensures that the machine does not move while you are working or transporting it. The brake keeps the machine stationary in one spot, in order to avoid any potential mishaps after it has been moved.

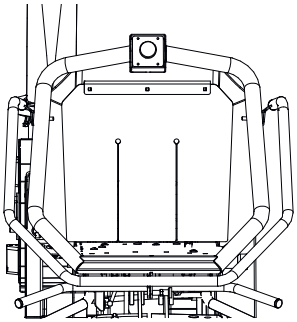

Anti-projectile shield

The flexible safety screen fitted inside the infeed opening protects the operator against flying wood chips. Under no circumstances should you place your hands beyond this flexible, transparent screen.

The operator must remain aware that lifting this screen means losing the protection it provides and increased risks.

It is to be replaced in the event that it is damaged.

order code: **BR 902 000 020**



Safety kit

Because we here at ELIET are concerned for your safety, we cannot stress enough the importance of using all of the protective gear included in the standard safety kit that we supply. This kit contains your Personal Protective Equipment (PPE): safety glasses, hearing protectors and a pair of multi-purpose gloves.

7.3. Safety regulations

7.3.1. General safety regulations

- The Owner Manual must stay with the unit during its complete service life. It serves as a reference for the user, and enables the machine to be used and maintained in accordance with the correct instructions. Always refer to this instruction manual if you have any doubts about an action that you are about to perform.
- If the instructions stated in this manual are not clear to you, do not hesitate to contact your Eliet dealer for further explanation. ELIET's helpdesk (+32 (0)56 77 70 88) is also at your disposal during office hours to provide answers for your questions.
- Read the chapter that is meant for the dealer **("8. Dealer's duties", page 25)** and immediately check whether or not the machine has been delivered in accordance with the instructions.
- Carefully observe all safety regulations when using the ELIET machine ! Carefully read all the instructions relating to the use of the machine. All these instructions relate to your personal safety.
- Ask your ELIET dealer to explain the possible dangers associated with the machine.
- Read and observe all safety messages posted on the machine in the form of stickers.
- Read and observe all safety messages posted on the motor.
- Under no conditions whatsoever may the original design of the machine be modified without written consent of ELIET.
- Under no circumstances should a safety device be short-circuited, disassembled or deactivated/ neutralised.
- As shredding involves considerable physical effort, take regular breaks and make sure to eat and drink sufficiently.
- It is not recommended that persons with heart problems or balance disturbances operate the machine.
- Avoid inhaling the exhaust fumes from the machine. Exhaust gases contain toxic particles that could result in poisoning and even death. As such, the engine should never be started in an enclosed space.
- Once the internal combustion engine has been started, there is a risk that chips will be ejected.
- For your safety, ensure that the machine is always operating with properly installed, fastened, and sharpened cutters/blades.

7.3.2. Careful and sensible use

- This machine is designed solely for shredding branches, prunings, leaves and all other organic garden debris. It should never be used for any other purposes than the ones indicated above.
- Never attempt to shred frozen branches.
- Ensure that you are concentrating on each of your actions as you use the machine. Do not let routine use of the machine dull your attention. Never act impulsively or reflexively.
- Despite the extensive safety features, do not take any reckless risks.
- Never allow any tools to enter the feeding hopper when the engine is running.
- Avoid allowing any other objects to enter the hopper (cords, stones, metal, plastic, textile, etc.) when the engine is running.
- According to the manufacturer, this model will take branches up to 80 mm diameter. For your own safety, it is imperative that you never attempt to surpass this limit.

- The machine is not designed to be subjected to the stated maximum capacity (the maximum branch diameter) for long periods. As a guideline: no more than 10% of the material to be shredded should have a branch diameter above 60 mm.
- Never use a footstool to feed garden waste into the feeding hopper.
- Do not use a garden fork or a shovel to feed organic waste into the machine.
- Do not use your foot to push organic waste into the infeed hopper.
- Never put tools or objects in the infeed hopper. They could inadvertently slide down to the bottom and get trapped in the blades.
- Ensure that your working space has a minimum light intensity of 500 lux.
- Ensure that the brake system has been engaged during use to avoid uncontrolled movement of the machine. (version STD, PRO, and ON WHEELS)
- For ethical reasons, ELIET distances itself completely from the shredding of animals and living organisms through the use of its machines.
- Tip: When working with the shredder, try to feed material as much as possible into the right side of the hopper so that it stays as long as possible in the shredding chamber before being ejected.
- Always be cautious when shredding or moving the machine. Do not allow people within 10 metres of the machine.

7.3.3. Responsibilities of the operator

- All persons using the machine are assumed to be fully conversant with the safety regulations.
- The operator is fully liable when using the machine, in regard to themselves and others.
- Operators are presumed to possess a certain level of maturity that permits them to make decisions based on common sense.
- Minors must not operate the machine. However, this does not apply to youths above the age of 16 years, who are learning to operate the machine under the supervision of an experienced operator.
- Disabled persons may only operate the machine when under the supervision of an experienced operator.

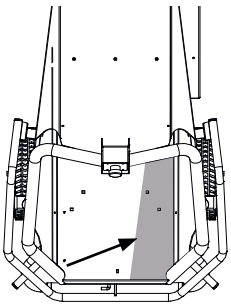

- Children and animals must be kept well away from the machine. (10 m)
- ELIET recommends that the machine should not be lent to others. However, if this is done, only lend it to persons who are competent in using the machine.
- Always ensure that the user is aware of the potential hazards and ensure that he reads the manual before he uses the machine. Failing that, a qualified user may give the required explanations concerning safe and correct use.
- Anyone who will work with this machine should be well-rested and in good physical condition.
- If you become tired during the work, take a rest in due time. Persons consuming alcohol or drugs must not operate this machine.

7.3.4. Personal Protective Equipment (PPE)

- Working with this machine requires appropriate workwear: clothing that covers the entire body, sturdy work gloves and closed shoes with non-slip soles.
- ELIET provides a safety kit with each machine. This kit includes safety gloves that conform to standard EN 388 (3122X). This standard guarantees protection against mechanical hazards relating to using a machine. Work gloves that conform to standard EN 388 protect against hazards such as abrasion, cuts, tears, and piercing.
- Do not wear loose-fitting clothing (a scarf, for instance, should never be worn). If you have long hair, pull it back into a ponytail and wear a cap or a headband.
- Never wear a sweatshirt with drawstrings.
- To protect your eyes and ears, you must also wear safety goggles and hearing protectors.
- Shredding may result in dust production. If this dust irritates your lungs, ELIET recommends that you wear a dust mask that conforms to Directive 89/686/EC.

7.3.5. Danger zones

- While the machine is operating, make sure that nobody comes within 10 m of it. Do not take any risks: Turn off the engine immediately as soon as anyone enters the danger zone.
- When you walk away from the machine, the engine must be switched off. Always wait until the blades have come to a complete stop before carrying out any operations on the machine. When the engine is running, focus all of your attention on operating the machine.
- The operator safety zone is located on each side of the feeding hopper, close to the feeder opening, with the emergency stop device easily accessible.
- You should never place your hands beyond the anti-projection shield.
- You should never reposition the blow chute or the deflector flap when chips are being ejected.
- As the manufacturer, we recommend turning off the engine before changing the direction of the blow chute or the anti-projection shield.

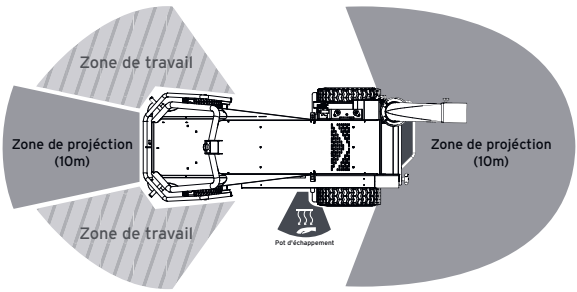

7.3.6. Regular maintenance

- Periodic maintenance is essential. Strictly follow the maintenance schedule in this user manual **("11. Maintenance tasks described in detail", page 43)**.
- When replacing parts as a result of wear or failure, always request genuine ELIET service parts from your ELIET dealer. This is important in the interests of your own safety.
- Always make sure the engine is switched off and the battery cables disconnected before performing repairs or maintenance.
- Within the first hours of operation, a number of mandatory maintenance activities must be carried out: Checking and tightening the blade bolts. Re-tensioning the belt.
  (Read § "11.4 Machine maintenance"
  (page 52) and § "11.4.4 Motor axle drive belt tension)" (page 60)

7.3.7. Respect the environment

Use the machine in a way that respects the environment:

- Avoid allowing the machine to run while you are not using it.
- Avoid spilling petrol while refuelling.
- Service the engine regularly in order to achieve optimum combustion.
- Sharpening and tightening the blades reduces the consumption of fuel.
- When changing oil, the dirty oil should be set aside in order to be recycled.
- Properly and regularly maintain the machine in order to maximise its lifespan.

8. Dealer obligations

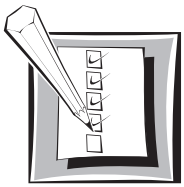

As an ELIET dealer, it is your obligation to instruct your customers on how to operate the machine and to point out the potential risks while using it. You are expected to carefully go over the maintenance points of the machine together with the new owner. Repeat these instructions until the new owner has fully understood them all. Special note: the following must be made explicitly clear to the customer:

AFTER THE FIRST 5 HOURS OF MACHINE USE, THE BLADE FASTENING BOLTS MUST BE CHECKED AND RETIGHTENED.

BELT TENSION MUST ALSO BE READJUSTED AFTER A RUNNING-IN PERIOD OF 5 HOURS.

- Each machine that leaves the factory contains a limited amount of oil and fuel. The dealer must check the levels of the oil and fuel, and top them up in accordance with the instructions in this manual (or in the engine manual).
- The dealer is to test and check the proper functioning of all safety features.
- The rpm will be set at 3,200 rpm.
- The dealer is to turn on the machine and let it run for a short period of time to confirm that everything is functioning properly.
- He also checks that the bolts securing the blades are fully tight.
- The dealer will fully lubricate the machine
  (see § "11.4.6 General lubrication", page 64).
  ("11.5 Maintenance schedule", page 68)



We cannot insist enough on the importance of sufficiently informing your client of all potential risks.

9. Operating instructions



9.1. Preliminary checks



You should make a habit of checking the following points before starting any work

Checklist

1. Check the oil level of the machine
   (See "11.3.1 Checking engine oil level + refilling", page 48).
2. Ensure that there is enough petrol in the tank. If necessary, top up the tank with petrol. Keep in mind that average consumption is approximately 2.5 l/h.
   (See "9.2 Filling up with fuel", page 27)
3. Check that the air filter is not too dirty.
   (See "11.3.3 Cleaning the air filter", page 50)
4. Check the blades for wear and ensure that they are tightly fastened to the blade supports. If they need to be sharpened, this must be done first
   (See "11.4.2 Sharpening the blades", page 54). If you notice cracks or fractures in any blades, they must be replaced immediately. **(See "11.4.3.2 Steps to follow to replace a blade", page 59)**. For safety's sake, tighten the blade bolts
5. Check that the belt is still sufficiently taut. If this is not the case, tighten it
   (see "11.4.5 Checking and regulating the tension of the tracks", page 63)
6. Check whether all safety features on the machine still operate.
   (See "7.2 Safety features", page 19).
7. Check that all protective elements have been correctly installed, and that all of the parts have been secured in place properly.
8. Check that the tyres have enough pressure. (for versions STD, PRO, and ON WHEELS)

Once these items have been checked and approved, you can prepare the work area **("9.3 Preparing the work area", page 28)** and move the machine to the work area.

9.2. Filling up with fuel



It is recommended that you keep the tank full of fuel and avoid it running dry.



The petrol tank has a capacity of 6.1 l.

If there is not enough fuel in the machine, proceed to top up the tank. ELIET recommends only using petrol straight from the pump

(See "16.1 Specifications for lubricants and fuel", page 80).

Use unleaded petrol with a minimum octane rating 95 (preferably 98 or 99), or E5. No other types of fuel are to be used in the machine. (Read the engine manual.)

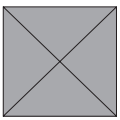



Under certain conditions, petrol is highly flammable and extremely explosive. Fire and explosions caused by petrol can result in serious burns or damage to property.

- Never add fuel while the engine is running. Always allow a few minutes for the engine to cool off before topping up with fuel.
- Only use fresh petrol.
- Never add oil to petrol.
- Because of the short shelf life of petrol, ELIET recommends that you buy it in small quantities.
- Store fuel in an approved container. Keep this container out of reach of children.
- Store fuel in a well-ventilated area away from open flames, sparks and heat sources.
- Never top up fuel in the location where work is to be performed. Always keep a distance of at least 10 m from that location. This will help prevent any risk of fire.
- Clean the rim of the filler cap (1) before unscrewing it, to avoid any dirt from entering the fuel tank. Never fill the tank to the point of overflowing. Fill the tank to within 50 mm of the top. Do not fill it up all the way to the opening.
- Always use a funnel or pouring spout to pour petrol into the tank. Suitable funnels can be obtained from your ELIET dealer.

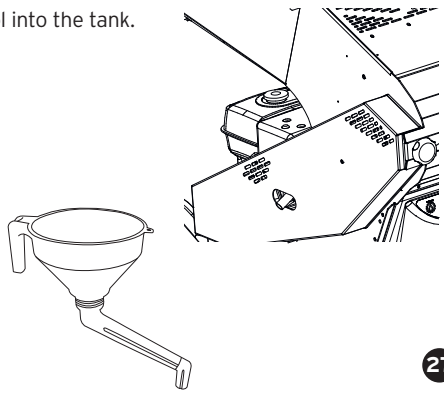

- Screw the cap back on to the tank as soon as possible.
- Be careful not to spill petrol onto your clothing. If you should do so, change your clothes immediately.
- In the event that fuel is swallowed or gets into your eyes, obtain medical attention immediately.



Never top up the fuel tank in the vicinity of smokers or naked flames.

9.3. Preparing the work area

- First clear the area where the machine is to be used. In addition, the paths leading to the organic waste must also be properly cleared, to prevent the operator from tripping over any obstacles. This is another measure the operator must take for their own safety.
- Position the machine in such a way that the chips ejected from the discharge blow chute do not cause personal injury or material damage.
- Engage the parking brake once the machine has been placed in the work area. (version STD, PRO, and ON WHEELS)
- The machine must never be used on sloped surfaces (whether lateral, uphill or downhill).
- Make sure to sort the material to be shredded beforehand. This provides the operator the opportunity to ensure that no foreign objects will enter the machine along with the material.
- Foreign objects are defined as: any non-organic object (such as metal, stones, plastic, PVC and cords) or organic material with a diameter in excess of the stated capacity. Not only can these objects cause serious damage to your machine, but they can also be ejected from the machine and cause serious harm.
- Always position the machine so that the wind will blow the dust that is produced away from the engine.

9.4. Starting and turning off the petrol engine



Never start the machine if the engine cooling fins are not clean and free of debris to protect it form overheating.



Also, read the engine manual.



Never run the engine indoors. Exhaust gases contain toxic substances and may lead to poisoning or suffocation.



Ensure that no unauthorised persons are within a radius of 10 m around the machine before starting the engine.



The blades begin moving as soon as the engine is started. If there are any wood chips still remaining in the shredder or the turbine, they will be projected from the machine. Ensure that no one is present in the projection zone. Before starting the engine, place the deflector flap in transport mode.

9.4.1. Start the engine.

Before starting the engine, check that there is sufficient oil and fuel in the engine. If necessary, read the following sections:

See "11.3.1 Checking engine oil level + refilling", page 48
See "9.2 Filling up with fuel", page 27



Before starting up the machine, protect your ears with hearing protectors and your eyes with the safety goggles. Before starting the engine, place the deflector flap in transport mode.

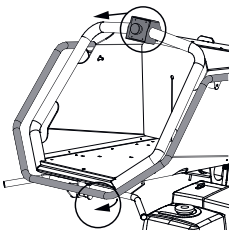

- Ensure that the shredding chamber is empty, in order to avoid overloading the starter mechanism.
- Ensure that the feeding hopper is empty (no organic waste, no tools, etc.).
- Place the deflector flap in work mode once you are in the work area.
- Check that the emergency stop button has not been pressed.
- Check that the shredding chamber maintenance hatch has been closed properly.
  (if you have the STD version, check that the emergency stop bar is in a retracted position)
- Always ensure the emergency stop device is in a neutral position.

1. Open the supply valve on the engine.
2. Set the "starter" (choke lever) to "Closed".
3. Move the throttle lever up to the maximum position, towards the image of the rabbit.
4. Place the engine ignition switch in the "ON" position
5. Pull on the starter cord until the engine starts, multiple times if necessary.

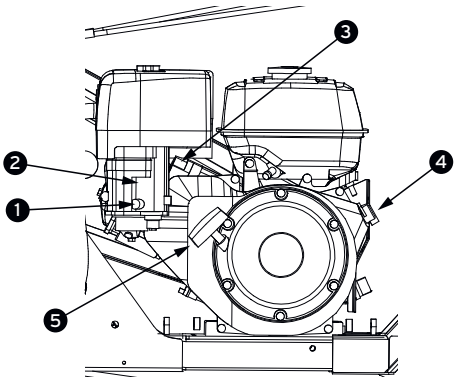

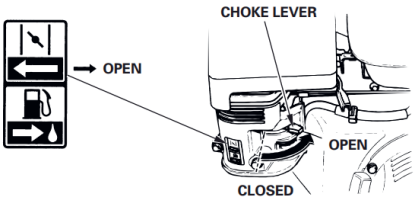

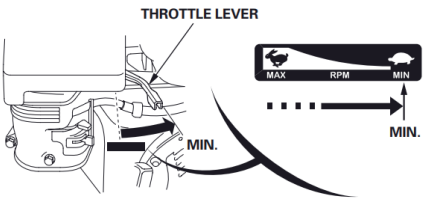

Once the engine is running, leave it to run for a few seconds (+/- 3 seconds) and then immediately set the "starter" in the "open" position. This is an important step, since it will avoid overflooding the engine with petrol. Otherwise, the engine will slow down, start emitting thick smoke and finally cut out. If that happens, restart the engine without using the "starter". If you can no longer get the engine to start, it is likely due to excess fuel (a "flooded" engine) or the spark plug has become clogged. In that case, you will either need to clean it or replace it.

9.4.2. Turning off the engine



Only shut off the engine once the shredder, the shredding chamber, and the turbine are empty, and when no more wood chips are being ejected from the blow chute. Wait 10 seconds for the shredder to come to a complete stop before working on the machine.

1. Stop the rotation of the feed roller, so that the shredder is no longer being supplied with material.
2. Wait for a moment to ensure that all shredded material has been evacuated.
3. Slowly reduce the engine speed, and pull the throttle lever back towards the image of the turtle.
4. Move the switch to the OFF position
5. You can stop the engine by pressing on the emergency stop button (on the STD model, the emergency stop device can be used as well).

9.5. Moving the machine



Only move the machine once the deflector flap has been lowered to the maximum position to avoid as much as possible the risk of any remaining shredded material being ejected.

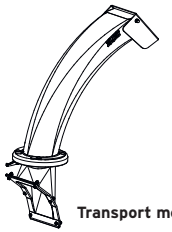

Transport mode

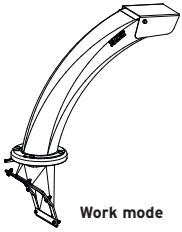

Work mode



Before moving the machine, check that the direction that you want to move it isn't blocked with any obstacles, potholes, flooded terrain, or areas that cannot support the weight of the machine.



Nothing should be inside the hopper as the machine is being moved.



Machine weight > ground pressure: STD: 260 kg
PRO: 265 kg On Wheels: 265 kg Cross Country: 267 kg



You should first try to become familiar with how a self-propelled machine moves by experimenting with it in a quiet, open area without any bystanders.

Models with wheels are equipped with a parking brake. This brake can also be used to stop the machine if you risk losing control of it.

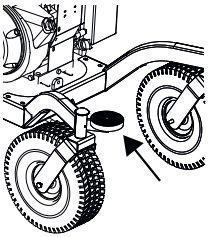

A. If you chose a model without traction (types STD and PRO):

- As these models are not equipped with a wheel braking system, the engine is always cut whenever the machine is moved.
- To move the machine, push it forwards
- **Caution:** the machine weighs around 265 kg. If you are not able to move this weight, ask for help.
- **Caution:** make sure that the machine does not tip under its own weight while being rolled on a slope. Also, keep inertia in mind, and give yourself enough time and space to bring the weight to a standstill. Always steer the machine with the back of the machine facing your destination. You should only move the machine with the feeding hopper facing down the slope when descending a slope, to prevent the machine from tipping forwards.

B. If you chose a self-propelled machine (ON WHEELS type):

- Start the engine **(See "9.4 Starting the Petrol Engine", page 29)**.
- Reduce the engine speed.
- Caution, when the engine is running, there is an imminent risk of projection, and if there are any wood chips remaining inside the machine, they could be blown out. This is why it is important for you to always wear safety goggles.



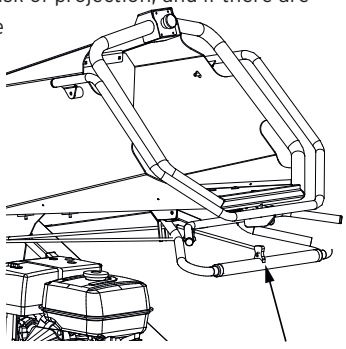

- Moving the machine: The handlebars are equipped with a control handle to activate the wheel drive. Moving the control handle forwards will cause the machine to move forwards. The more you move the control handle forwards, the faster the machine will move. This also applies to the opposite direction: Turning the control handle in the opposite direction will cause the machine to move backwards at a speed proportional to the amount that you turn the control handle.
- Make sure that the environment the machine will be used in will not be impacted by any potential projectiles.

C. If you chose the Cross Country version (version with caterpillar tracks):

- Start the engine **(See "9.4 Starting the Petrol Engine", page 29)**.
- Reduce the engine speed.
- On the Cross Country version, the handlebars are equipped with two control handles to activate the wheel drive: the right control handle activates the right caterpillar track, and the left control handle controls the left caterpillar track.

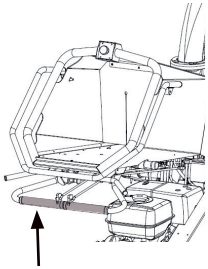

- To move the machine forwards in a straight line (forwards or backwards): Move both control handles at the same time. Moving both control handles forwards will cause the machine to move forwards; pulling them backwards will cause the machine to move backwards.
- If you want to stop rolling, let go of both levers simultaneously, or turn them both to a neutral position at the same time, to prevent the machine from rotating.



Whenever there is a difference in the angle of rotation between the left and right control handle, the machine will not travel in a straight line.

- To turn to the right: The machine will veer to the right if you turn the left-side handle **(1)** a greater degree than the right-side handle **(2)**. The greater the difference between the control handles, the faster the machine will turn.
- To turn to the left: The machine will veer to the left if you turn the right-side handle **(2)** a greater degree than the left-side handle **(1)**.
- To turn the machine on the spot: Move each handle in opposite directions. This may cause the machine to change directions very suddenly.

MIND YOUR FEET!

The operator must always stay alert and move the control handles carefully.



The machine can change direction suddenly. Ensure that you have enough space to manoeuvre before moving into a tight space. Reduce the engine speed.

TIP:

You should first try to become familiar with how a self-propelled machine moves by experimenting with it in a quiet, open area without any bystanders.



The speed at which it moves will increase if you give it more gas, as the engine speed will also increase. (Read the previous tip before increasing the speed of the machine.)

9.6. Working with the machine

9.6.1. Before you start working

- Wear proper apparel, protective gloves and safety equipment as instructed in this manual **(See "7.2 Safety regulations", page 19)**.
- A good gardener should plan out their work and be well-organised. This will enable you to have perfect control over your work and to avoid accidents.
- The waste to be shredded should be systematically sorted before commencing the work: big branches, small branches, leaves and any damp objects. Ensure that the material does not contain any foreign objects.
- Never run the machine in an enclosed area that is not sufficiently ventilated. Otherwise, there is a serious risk of being poisoned by the toxic exhaust fumes from the engine.
- Always shred at full throttle.
- The parking brake (on models with wheels) should be set as soon as the machine is in the work area.



Before you start shredding, check that the chute and the deflector flap are facing the desired direction.

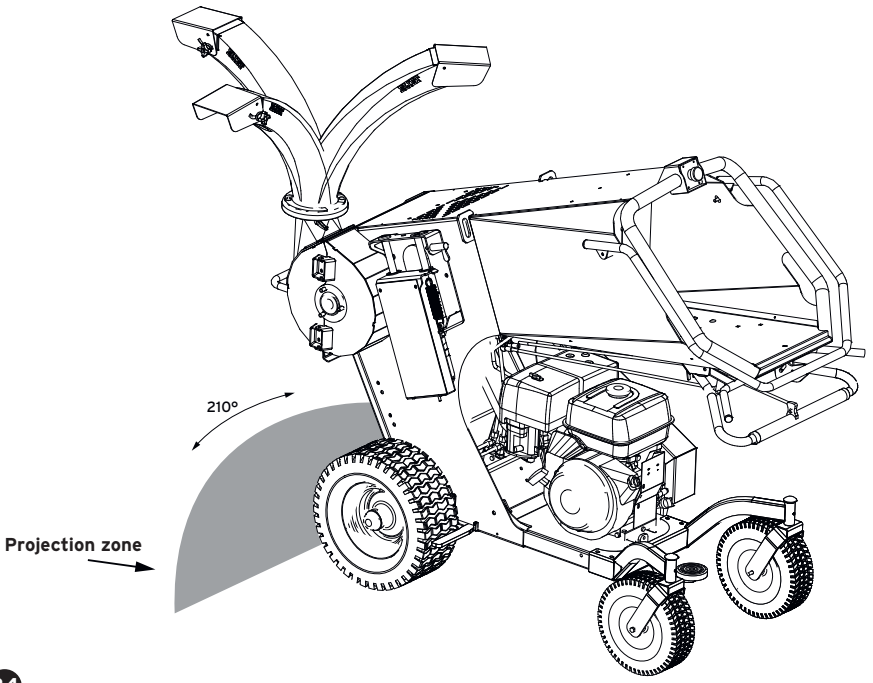

9.6.2. Turning and positioning the blow chute and deflector flap



When choosing which direction to point the blow chute, check that there are no people, animals or objects in the projection zone.



Stop the engine before changing the direction of the blow chute.

To position the blow chute, you will need to release the lever **(1)**, hold the blow chute and turn it to the desired position. Once the blow chute has been set to the desired position, the lever **(1)** can be retightened.

The base of the chip removal nozzle is equipped with safety lugs to prevent it from rotating towards the operator. To ensure proper operation, please make sure that this nozzle is assembled as shown in the view on the previous page (page 56 and the drawing below). To change the orientation of the chip removal nozzle, unscrew the adjustable clamping handle (position 19) approximately 1 full turn and then orient the nozzle in the desired direction. The radius of rotation over which the handle can be turned is limited, which is why it is equipped with a "to-and-fro" notching system. If you reach the end of the rotation radius, pull the handle vertically downwards so that the red button in the handle disappears. The lever is then released from its notches and can be turned freely to the beginning of the rotation circle. Allow the lever to move up the handle again so that it engages in the notch again, then resume the rotation. Once the desired nozzle orientation is achieved, tighten the handle firmly to lock it in place and prevent unwanted rotation.

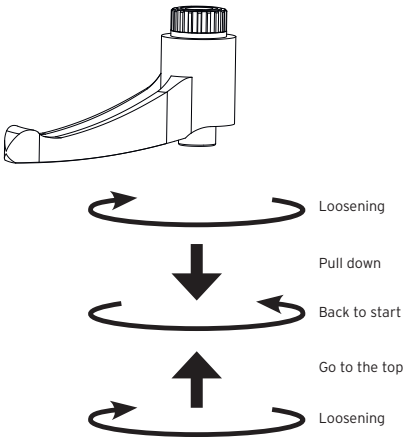

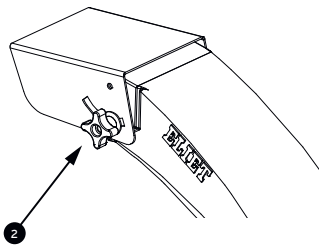

Position the deflector flap as desired, using the clamping handle **(2)** to orient the deflector
flap, then clamp.

9.6.3. While working

- Be very attentive while working. While operating the machine, you must focus all of your attention on it.
- Start the engine **(See "9.4 Starting and stopping the Petrol Engine", page 29)**.
- Allow the machine to run empty for at least 5 minutes so that it heats up.
- Whenever the machine stops unintentionally, you must always empty the shredding chamber before restarting the machine.
- Make sure you do not accidentally press on the emergency stop button as you are introducing trimmings to the machine. This will cut the engine.
- In an emergency, or if you lose control, you can press on the black lever (or the emergency stop button). This will stop the feed roller (or cut the motor in the case of the Vector 4S STD)
- Always shred at full throttle. This will ensure optimal performance.
- Do not block the flow of air to the shredding chamber by overfilling the feeding hopper. This will prevent the evacuation system from working properly, and cause the machine to become clogged. Insert trimmings to the hopper in small quantities. When inserting branches, you must always start with the most voluminous part first.
- Orient trimmings towards the right hand side of the blade axle. That way, they will be shredded more intensely, and pass smaller wood chips into the evacuation system. Orient the material into the hopper from as far away as possible. Keep hold of the material until you reach the anti-projection shield.

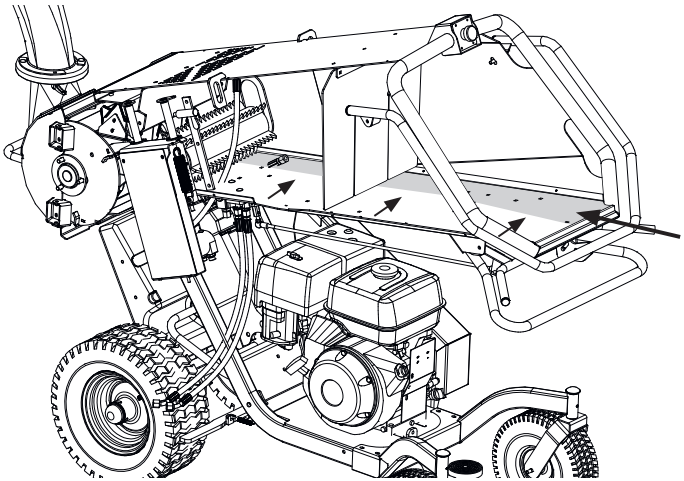



Never allow your hands to pass beyond the anti-projection shield. The rotation of the blades causes the blade axle to direct the trimmings into the shredding chamber. The operator must therefore moderate the speed and keep hold of the material at the same time (if the machine does not come with a feed roller).

9.6.3.1. Operating the feed roller

(If you have the Vector PRO, Vector ON WHEELS, or Vector Cross Country model)
In order to simplify operating the feed roller, we have opted for a clear and comprehensible system that requires you to move the bar, as depicted below.

- Pulling on the bar (see the image below) will cause the feed roller to start moving, drawing the material to be shredded into the feeding hopper at a constant speed **(1)**. If you push the operator bar forward once, the feed roller will stop. If you push on the bar a second time, the feed roller will move in the opposite direction and move the material out of the feed roller **(2)**.
- The feed and stop positions are fixed positions that the operator lever can rest in.
- The reverse position is not a fixed position, so you must manually maintain the lever in this position to make the feed roller operate in reverse. Letting go of the lever returns it to the stop position.
- The two bars are connected, which enables you to work on either side of the shredder and to avoid any risks from projectiles by standing in front of the hopper.

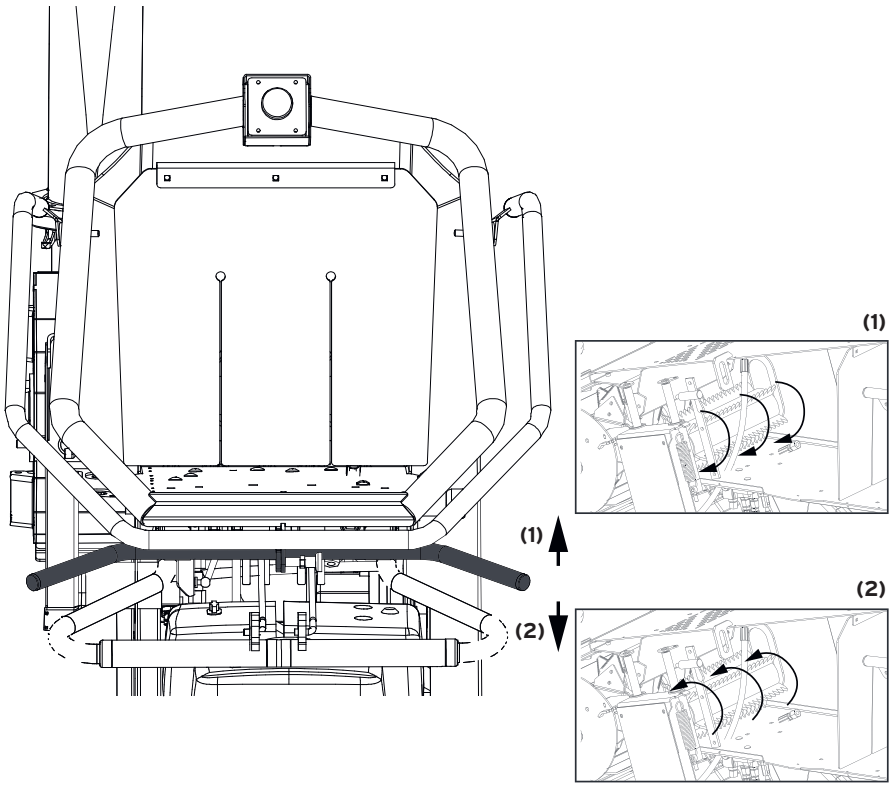

- You should preferably stand to the side of the feeding hopper when putting organic waste into it. This will keep you out of the path of any wood chips that might still be ejected past the anti-projectile shield.
- Feed the organic waste into the hopper and guide it towards the feed roller. In the case of loose waste (leaves, etc.), use a branch to push the material towards the feed roller. (DO NOT USE a shovel or a garden fork).
- In the case of branches, it is recommended to feed in the thickest part of the branch first.
- Never use a footstep to feed organic waste into the hopper.
- When feeding organic waste into the machine, the operator should never, under any circumstances, place their hands beyond the anti-projection shield.
- Pushing jammed organic waste into the hopper with your foot is strictly forbidden.
- If the safety bar is pulled down, the feed roller is stopped, and it is not possible to start it again without first releasing the bar from under the hopper and then starting the engine again. (in the case of the STD version)
- The same applies for the emergency stop button when the engine has been cut. There is no way to start the engine again without first releasing the emergency stop button by turning and pulling on it at the same time, and then starting the engine again.



Do not lean over the feeding hopper to push material into it, in order to prevent yourself from **EVER** placing your hands into the machine beyond the anti-projectile shield.

You will obtain quicker results by reducing the amount of material that you feed into the machine.



Thick branches that have been sawn at both ends must be fed in from the right hand side of the hopper so that they are guided by the wall. Make sure that branches do not turn perpendicular to the in-feed direction, as this can block the machine.

To stop the feed roller

1. Either push on the feeding bar **(see Section 9.6.3.1)**,
2. push the emergency safety bar down,
3. or push on the emergency stop button.
4. Feeder speed regulation (option number MMA 01 530 210): If you have selected this option (rotary knob beneath the feeding hopper, to the right), you can regulate the speed of the feed roller according to the material to be shredded. By adjusting the knob (in the range of 1 to 10), you can obtain maximum performance. (Optional system)

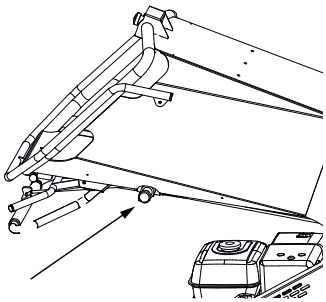

5. The rotation direction of the feed roller can be reversed by pushing the control bar down. This is very useful if ever a piece of wood becomes lodged under the roller.

If trimmings get tangled around the feed roller, you can make the feed roller run in the opposite direction to untangle the material.
If something has obstructed the shredding chamber, stop the combustion engine to eliminate the obstruction **(see "Starting and stopping the Petrol Engine", page 29)**.



Wait for the blades to come to a complete standstill before carrying out any operation on the machine.
Disconnect the spark plug wire for your own safety.

- Open the maintenance hatch in order to access the blade axle and the ejection turbine **(See "11.2.3 opening the shredding chamber", page 45).**
- Check that the ejection turbine has not been damaged.
- Check the blades and the blade holders for damage.
- In the event of damage, carry out repairs before shredding again.
- Empty the shredding chamber before starting the motor again.

If you notice a foreign object in the organic waste in the feeding hopper, perform the following steps:

- Push on the feed roller bar as far as it will go to reverse the direction it is running in and push the material out of the machine.
- Stop the combustion engine.
- You may now safely reach into the feeding hopper to remove the foreign object(s) that you found amongst the material to be shredded.
- It is possible to lock the feed roller in a raised position to dislodge the foreign object. Never place your fingers under the feed roller.
  ("7. Safety regulations", page 17)
- Remove the foreign object(s).

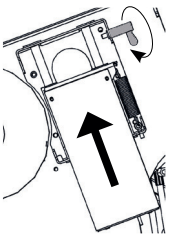

If you notice any strange noises, immediately stop shredding. Stop the engine immediately, and investigate the source of the sound. Before proceeding, perform the necessary repairs.

9.7. Cleaning the machine

It is recommended that you clean the machine after each use according to the information in the following chapter (See "11.5.2 Daily maintenance", page 70).
Failing to keep your machine clean will lead to

- Premature wear of the bearings, gaskets and drive belts
- An increased risk of fire
- A decreased engine cooling efficiency
- Fractures or cracks that become undetectable
- A detrimental effect on the paint coating and safety stickers.



A machine that is no longer in good working condition may compromise the safety of the user.



Where appropriate clothing when cleaning.
You must always wear protective gloves.

- Empty the shredding chamber after each use.
- Remove any leftover shredded material and organic waste from the feeding hopper.
- Remove any leftover shredded material and wood dust that has accumulated in the cavities of the machine.
- Remove any leftover shredded material that is stuck to the tree guide on the feed roller.
- Use a dry cloth and a soft brush for cleaning. To remove grease and lubricants, use penetrating oil spray containing molybdenum disulphide. This spray lubricates and also dissolves rust.
- It is also practical to keep compressed air at hand. It can be used to easily clean various areas of the machine.
- Pay special attention to cleaning the engine. The cooling fins and air inlet in particular must be thoroughly cleaned in order to guarantee the optimal cooling of the engine.
- Make sure that chippings do not remain on the exhaust as this could pose a fire risk or continue to smoulder after the machine has been turned off.
- Cleaning the machine with high pressure is not advised. Do not put too much cleaning pressure on bearings, electrical components or filler caps. Moisture can also cause corrosion and lead to faults in the electrical system.
- Water is the main cause of rust formation, so you should avoid using too much water.
- Lubricant is washed away during cleaning. As such, you should also plan to lubricate the machine again after cleaning it. After using water, always carefully dry the machine.
- The engine manufacturer does not recommend cleaning with water.

10. Transporting the machine



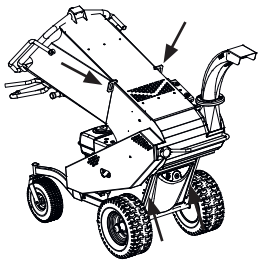

Anchor points to secure the machine

- Make sure that the machine is properly secured to the vehicle during transport. Use the fixed parts of the frame to fasten it using straps. There are also two anchor eyelets on the hopper. It is very important that the infeed opening is completely free of branches and material.
- Before loading the Vector onto a trailer or van, **set the blow chute into transport mode (See point "11.2.4", page 46)**.
- Use slip-resistant ramps to load the machine into a van or trailer. Make sure that they are securely attached to the vehicle or trailer. Make sure that the ramps can support the weight of the machine. Allow for a load capacity of 300 kg more than your own weight.
- The maximum degree of lateral slope authorised for moving and operating the shredder is 10%.
- Under no circumstances should the angle of the ramps going up or down exceed 20%.
- Be careful and composed when loading and unloading the shredder so that the machine does not tip over and cause an accident.
- To descend a slope, walk backwards with the machine (with the funnel facing down the slope).

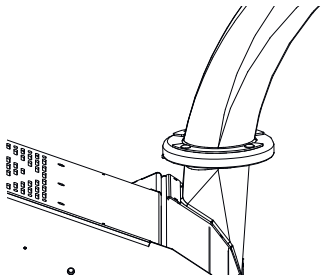

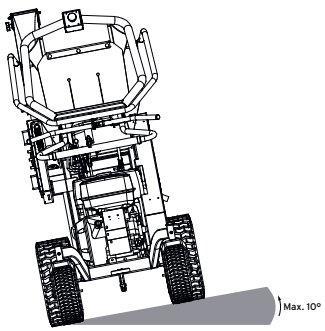

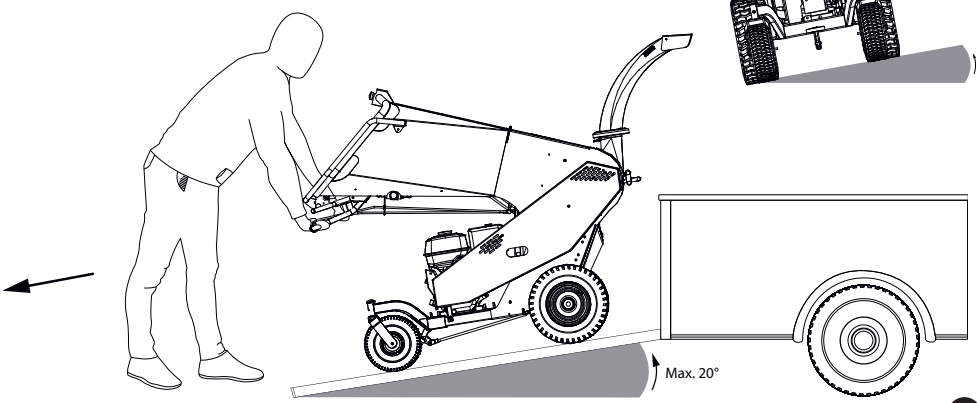

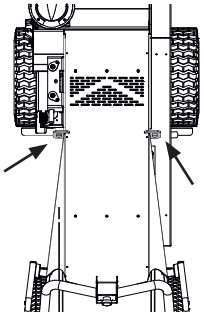

- If gravity causes the machine to descend more quickly down the slope than is desired, quickly move the control handle in the other direction. This activates the hydraulic brake on the machine. For Vector STD and PRO models, use the parking brake to stop.
- Loading a model without wheel drive can only be achieved with a minimum of 3 people.
- Make sure that the machine is properly secured to the vehicle during transport. Use the fixed parts of the frame to attach straps. Two eyelets are provided at the front in order to secure the unit.
- Do not secure the machine using the anchor eyelets before securing the feeding hopper with a tension greater than 800 N, to avoid the risk of deforming the chassis.
- Always engage the parking brake on the machine (on models with wheels).
- Ensure that the ramps used can support the weight of the machine and the operator. (at least 450 kg)



The parking brake is not enough to secure the load. The machine must always be secured to the vehicle using tension straps.



Nothing should be inside the hopper as the machine is being transported.

- Do not forget that the machine has a high centre of gravity. Use straps to secure both sides of the machine to the vehicle. This ensures that the machine will not topple over when the vehicle goes around a bend.
- Do not overload the vehicle. (Read **"14. Equipment specifications", page 75 for the exact weight of the shredder**.) **Allow for at least 300 kg.**

11. Maintenance tasks described in detail

11.1. General



The dealer's personnel are always at your service. The ELIET dealer can always count on comprehensive support from ELIET, working together to find a solution for any problem that you may have. For a repair or for the maintenance of the engine, you can always contact your ELIET dealer or a maintenance service that is recognized by the engine manufacturer. If you need to contact these services, please provide us with the Model Number and Serial Number of both the machine and the engine, and also describe the problem in detail.



Only use genuine ELIET replacement parts. These parts are manufactured according to the same standards and quality as the original machine parts.

Perform maintenance in a room intended for this purpose. This room must be:

- Spacious
- Easily accessible
- Well lit
- Dust-free
- Tidy
- Free of passersby

These characteristics are important to enable maintenance to be performed in an optimal manner.



Improper maintenance may subsequently compromise the safety of the operator.

Every maintenance intervention requires you to wear protective gloves, and safety glasses for some of them.
These have been provided with your machine.

TIP:

The maintenance work described below can essentially be performed by any person who possesses the requisite technical knowledge (in the event of a dispute, the warranty conditions shall apply). ELIET recommends, however, that the machine be taken once a year to your dealer to be serviced completely. Your ELIET dealer is always there to service your machine and advise you. They also keep stock of original ELIET replacement parts and recommended lubricants. Their staff can always obtain advice and service from ELIET, in order to provide you with impeccable after-sales service.

11.2. Miscellaneous interventions



For your own safety, after performing the maintenance, refit ALL guards.

NEVER OPERATE THE MACHINE WITHOUT SAFETY GUARDS!



Before beginning any maintenance work, always turn off the engine. As a precaution, remove the spark plug wire.



Always wear safety clothing and appropriate PPE such as gloves and safety goggles.

11.2.1. Removing the belt cover



Warning! The engine exhaust may still be hot. Avoid all contact with the muffler and the exhaust pipe.

- Stop the engine.
- Remove the following two M8 threaded bolts: use a 13 mm box wrench for both **(1&2)**
- Remove the cover
- When replacing, make sure that the rubber cap seal band is positioned correctly.

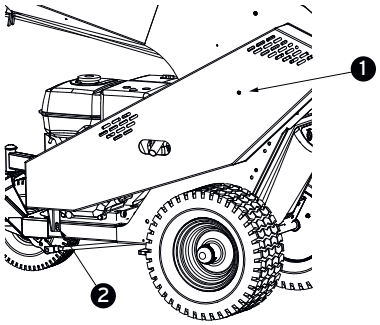

11.2.2. Removing the chain guard.

- Stop the engine.
- Remove the two threaded bolts **(1)** (M6*12). Use a 10 mm box wrench
- You can now remove the guard **(2)**.
- The cover attaches to the bottom by means of a notched groove in the arm of the feed roller

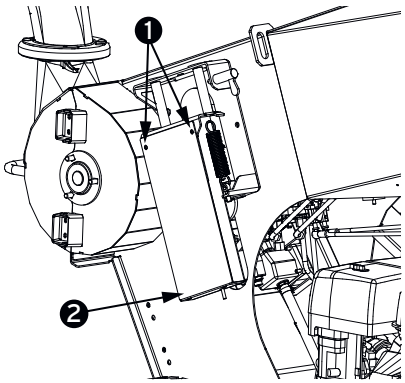

11.2.3. Opening the shredding chamber



Before opening the rear hatch, the blade axle must be at a complete standstill. Turn off the engine and remove the spark plug cap.



Avoid unintentional pulling on the starter cord during blade maintenance. Before beginning maintenance, pull the starter cord to the end of the reel. Place the cord around a back tube of the frame and tie a double knot.

- To do, simply turn the handle counter-clockwise. The rear hatch opens like a door.
- Remove all wood chips from the shredding chamber before closing the shredding chamber again.
- To close the maintenance hatch, push the hatch against the stop, position the end of the handle correctly into its base, and simultaneously turn it clockwise. Turn the screw until you feel resistance and finish screwing it in with one final half-turn. Check that there is nothing obstructing you from closing the door.

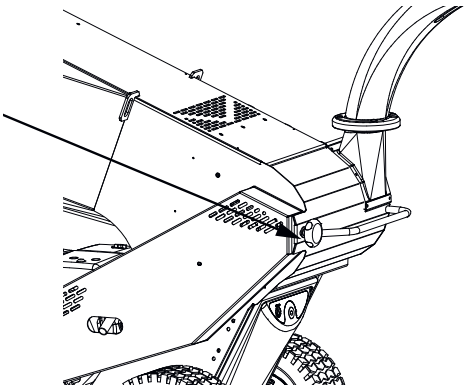



The blades are extremely sharp.
Avoid all contact with the blades and always wear appropriate protective gear, such as gloves.



If the rear hatch is not closed properly, you will not be able to restart the engine.

11.2.4. Setting the blow chute to the working or transport position



Ensure you never walk in front of the blow chute exit to avoid the risk of being struck by projectiles. When you are not working, always position the shredder with the deflector flap pointing towards the ground.



ELIET advises always turning off the motor before changing the direction of the blow chute.

- **(See "9.6.2 Turning and positioning the blow chute and deflector flap", page 35).**
- To position the blow chute, first turn the handle beneath the blow chute.
- Turn the blow chute until it is in the position you want. Note that it has a limited angle of rotation. Do not try to twist the tube beyond the stops.
- Once you have adjusted it to the position you would like, you can close the lever again.
- To adjust the position of the deflector flap, gently loosen the knurled-head screws by hand.
- After you have set it into the right position, fasten the screws again tightly.
- Tip: during operation, you should try to keep the flap lowered as little as possible to improve the flow of ejected material.

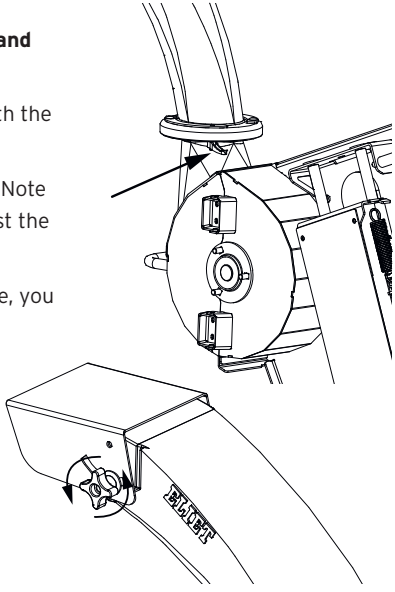

11.2.5. Manually lifting and locking the feed roller



Lifting the feed roller may expose you to certain hazards. Always wear protective gloves.



Before lifting the feed roller, always shut off the engine and remove the spark plug cap.

It may be necessary to manually lift the feed roller for certain maintenance operations, for cleaning, or if the blade axle has become blocked. Follow these instructions to lift or lower the feed roller:

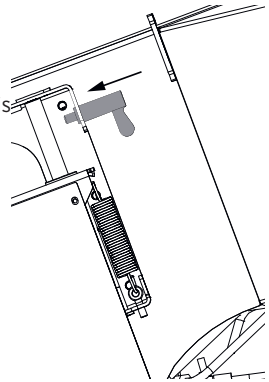

- Turn off the engine and wait for the axle to come to a complete standstill.
- If possible, free the spring located on the side of the feed roller. This will remove the need to fight against the resistance of the springs while lifting the feed roller.
- Insert the locking pin in the deployed position.
- Lift the feed roller with two hands and keep lifting until the lock to keep it in place engages automatically.
- To lower the feed roller, lift it slightly to release the automatic lock. In this position, you can safely work on the feeding hopper. Then, lower and guide the feed roller into its original position.
- Replace the spring.

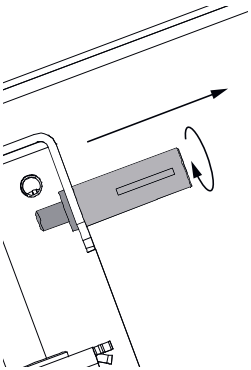

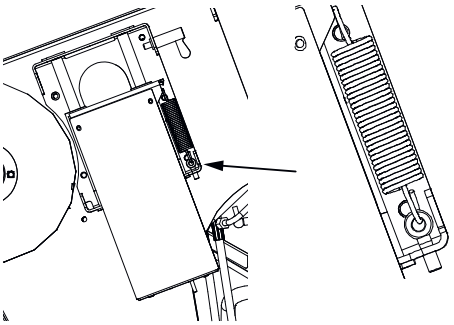



Put the feed roller spring back into its original position, and ensure that the lock lever is not still engaged when you start using the machine again to shred. The lever could potentially lock the feed roller in the highest position while the machine is running and cause an uncontrolled amount of material to be fed into the machine.

11.3. Engine maintenance



When running, engines emit carbon dioxide: an odourless and colourless poisonous gas. Inhaling carbon monoxide can cause nausea, fainting or even death.

Start the engine outside.
NEVER start the engine in an enclosed space, even with the windows and doors open. You must always turn off the engine when performing maintenance.

11.3.1. Checking engine oil level + refilling

Inadequate oil in the engine will cause irrevocable damage to the engine. Therefore, you should check the oil level regularly.

- Place the machine on a level surface so that the engine is perfectly horizontal.
- Stop the engine.
- Take a clean cloth.
- Remove the dipstick **(1)** and use the cloth to wipe it clean (the oil level shown on the dipstick is not always correct the first time it is removed). Return the dipstick (without screwing it in) then remove it again. The oil level must reach the "F" mark (for Full), and must always be measured by returning the dipstick (without screwing it back in).
- If this is not the case, you will need to top up the oil (caution: NEVER fill it beyond the maximum level).
- Removing the dipstick will provide you with an opening to top up the oil.

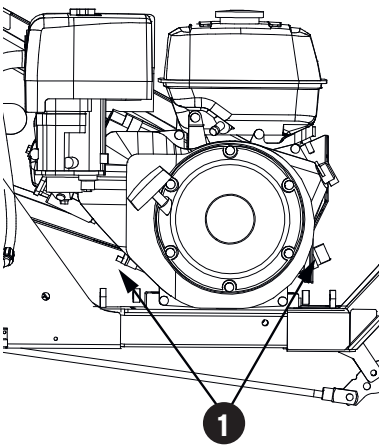



Topping off the oil must be done very carefully: overfilling the reservoir will damage the performance and lifespan of the engine.

- Pour the oil into the reservoir slowly. Check the oil level on the dipstick while filling to see if the desired level has already been reached.
- Only use the recommended oil **(see "16.1 Specifications for lubricants and fuel", page 80)**.
- Once the oil tank has been topped up, put the dipstick back in and tightly screw back on the filler cap.
- Immediately wipe off any spilled oil.



Make sure that no dirt enters the crankcase via the filler cap.

11.3.2. Draining the engine oil



Filling the engine with oil is performed in TWO steps: Read all of the text carefully!

- Make sure that the base of the engine is on a horizontal surface.
- Allow the engine to run until it reaches normal operating temperature, then switch off the engine.
- Place a receptacle (2-litre capacity) below the oil drain plug **(1)**.
- Unscrew the filler cap **(2)**.
- Unscrew the drain plug (1) and allow the oil to drain into the receptacle.
- Once all of the oil has been removed from the crankcase, screw back on the drainage plug. (Close with **a maximum force of 23 N.m**)
- Slowly pour new oil into the engine and then screw back on the filler cap. (Consult the engine manual for the exact quantity.)
- Start the engine and allow it to idle for 20 seconds.
- Stop the engine and wait for approximately 30 seconds.
- Pour in oil until it reaches the "F" (Full) mark on the dipstick. Continue to add oil until it reaches this level.
- Wipe off any spilled oil. Spent oil must be taken to a certified oil recycling service.

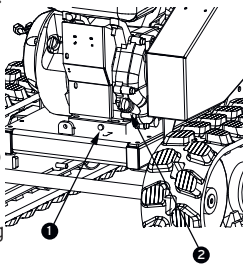



Insufficient oil in the engine can cause irrevocable serious damage to the engine.

11.3.3. Cleaning the air filter



If the engine has just been stopped, the exhaust will still be hot. Be mindful of burning yourself, and wear appropriate clothing and PPE.

- Unscrew the butterfly nut securing the cover of the filter holder **(1)** and remove.
- Before removing the air filter, use compressed air to remove any dust and dirt around the filter housing.

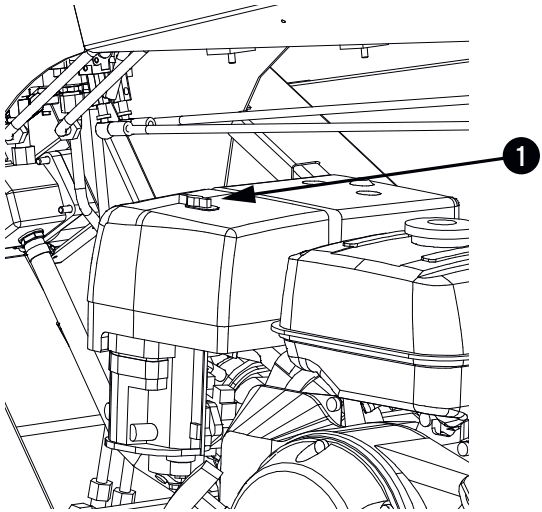

- Carefully remove the foam pre-filter surrounding the air filter.
- Unscrew the butterfly nut and remove the air filter. (Try to avoid allowing any dirt from entering the carburettor.)
- Clean the pre-filter using water and liquid detergent. Dry it with a clean cloth, soak it in engine oil and wrap it in an absorbent cloth in order to remove the excess oil.
- The air filter can be cleaned by gently tapping it against a flat surface, and by using compressed air.
- Refit the air filter (with the UP mark towards the top).
- Place the pre-filter back around the air filter.
- Return the cover and slot it back onto its support, replace the cover, and tighten the securing butterfly nut.

11.3.4. Replacing the air filter

These actions are almost identical to cleaning the air cleaner **(See "11.3.3 Cleaning the air filter (Clean air filter)", page 50).** The only difference is that this filter must be replaced with a new one.

New air filters of the correct type are available from your ELIET dealer or from other authorised dealers.

11.3.5. Replacing the hydraulic oil and the filter (Vector PRO, Cross Country, On Wheels)

- Place a receptacle (with a capacity of at least 10 litres) underneath the oil filter, located on the oil filter base support **(1)**.
- Open the oil reservoir filler cap **(2)**.
- Unscrew the filter and allow the contents to drain into the receptacle.
- Replace the oil filter with a new one. (Cartridge)
- Place the receptacle underneath the oil reservoir and unscrew the drain plug **(3)**.
- Check the drain plug gasket, and replace if damaged. Re-attach the drain plug with its gasket.
- Refill the reservoir with 8.5 L of fresh hydraulic oil and replace the fuel cap with its gasket.
- **(See "16.1 Technical specifications for lubricants and fuel", page 78)**
- Wipe off any spilled oil.

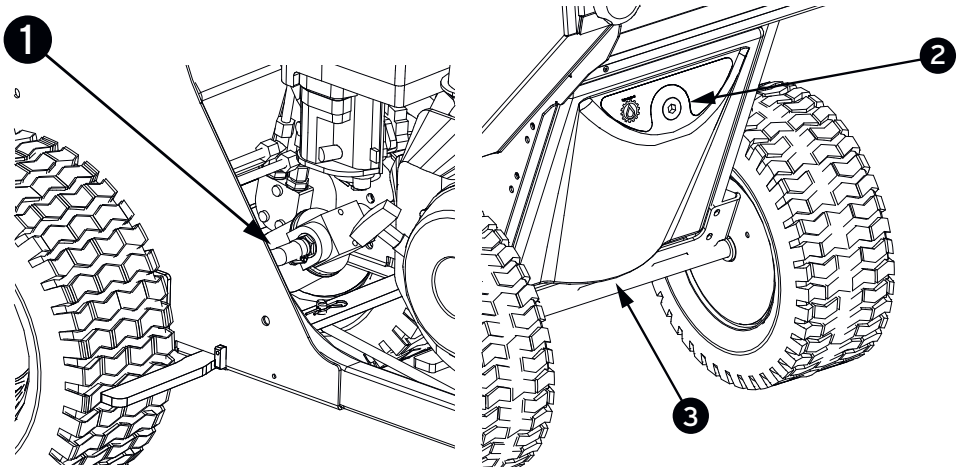

11.4. Machine maintenance

11.4.1. Routine inspection of the blades

Before beginning any machine maintenance, always turn off the engine.
Disconnect the spark plug wire for your own safety.



Before opening the rear hatch, the blade axle must be at a complete standstill. Turn off the engine and remove the spark plug cap.



The blades are extremely sharp. Avoid all contact with the blades and always wear appropriate protective gear, such as gloves.



If the rear hatch is not closed properly, you will not be able to restart the engine.



The use of blades presents a risk

Machine performance and shredding speed greatly depend on the condition of the blades. Enhance your own work comfort by taking the time to check, tighten and sharpen the blades, if needed, every time you are about to use the machine.

SHARP BLADES = OPTIMAL PERFORMANCE

Pay particular attention to the following: Shredding garden waste with the ELIET shredding system takes place in two steps. The blades first come into contact with the organic waste when it reaches the chopping block. During this initial cutting (1), wood and leaves are coarsely chopped into large, irregular chunks. These large chippings end up in the shredding chamber where they are finely chopped to produce small chippings. The secondary cutting (2) takes place once the chippings are small enough to be taken in and ejected by the turbine. Each of these cutting actions sets certain criteria that the blades must meet for optimal shredding efficiency: the tip of the blades are what are important for the initial cutting.

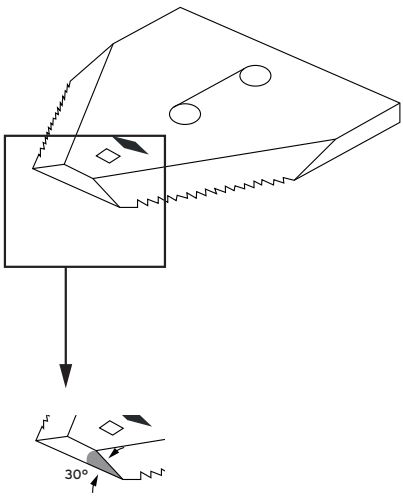

• Pay particular attention to the following: Shredding organic waste with the ELIET shredding system is done in two steps. The blades first come

into contact with the organic waste when it reaches the bedplate. During this initial cutting **(1)**, wood and leaves are coarsely chopped into large, irregular chunks. These large chunks then go into the shredding chamber where they are finely chopped to produce small chips. This is the second cutting **(2)**.

- Wood chips move through the shredding chamber until they reach the ejection turbine at the end of the blade axle **(3)**. They are then ejected by acceleration through the chip removal nozzle **(4)**.
- Each of these cutting actions sets certain criteria that the blades must meet for optimal shredding efficiency:
- The tips of the blades, in particular, are important with regard to the initial cutting.
- Since the blades act as splitting blades, the cutting angle is essential because it is the most important element.

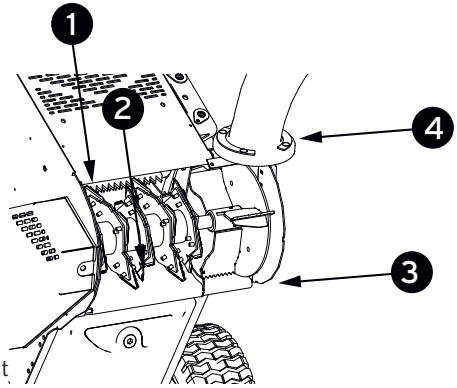

Since the blades act as splitting blades, the cutting angle is essential because this is the part that cleaves through the wood. The cleaving angle of the cutting edge of the blades should preferably be 30°. The sharper the blade edges, the less resistance they will encounter when splitting wood. This will lead to a smaller impact on the machine itself. It will create a significant reduction in vibrations and noise. It will also benefit the blade axle and bearings. You can ensure that the cutting angle is the best possible at all times by regularly grinding. **(See "11.4.2 Sharpening the blades", page 54)**.

In addition, the shape of the blade tips is also extremely important for the proper performance and speed of the initial cutting. The angle of the **blade tips** determines how the wood is pulled into the shredding chamber. If a blade tip is rounded due to wear, turn the blade around or replace it.

(See "11.4.3 Turning and replacing a blade (Turn Knives)", page 56).

The goal is to have the chips ejected as quickly as possible from the shredding chamber for the secondary cutting. This means they must be chopped down quickly in order to be ejected rapidly. As such, the chips must be become smaller every time they are in contact with the cutting edge of a blade. **The sharper an active cutting edge, the more efficient shredding will be.** As such, it is essential to regularly sharpen the cutting edges of the blades and to make sure that the blades are held tightly in place.

The **teeth on the cutting edge** provide increased cutting power to the blades and also ensure that the cutting edge remains sharp for a longer period of time. While performing maintenance operations, it is very important to avoid sharpening the teeth of the blades.
(See "11.4.2 Sharpening the blades", page 54).

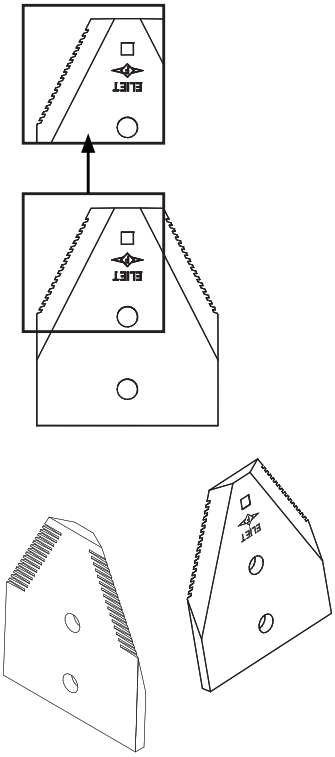

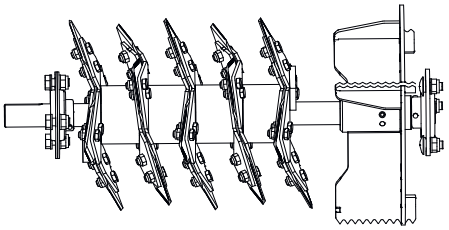

The positioning of the blades on the blade axle was purposefully chosen to create alternating chopping during the initial cutting and the proper introduction of the wood chips into the shredding chamber during the second cutting. Always try to maintain the original position of the blades when reversing or replacing them. **(See "11.4.3.1 How to turn a blade", page 57, where the principles are explained.)**

11.4.2. Sharpening the blades



Always wear safety goggles and work gloves.

Correct and timely sharpening (we recommend at least every 10 working hours) will extend the duration and operating life of the blades.

Preparatory warnings

- Always wear safety goggles and hearing protectors when sharpening blades. Gloves are also mandatory for performing any type of maintenance work.
- NEVER turn the blade axle by grabbing the blades directly. To turn the blade axle, you should use the blades of the propeller.
- Each blade has two cutting edges (reversible blade). As such, you must keep in mind that the opposite side of the blade you are sharpening could also be extremely sharp.
- Remove all wood dust and chip residue from the shredding chamber and from the propellers of the ejection turbine. This will remove the risk of starting a fire from their contact with smouldering sparks created by sharpening.
- For your own safety, remove the spark plug cap.
- Open the shredding chamber **(See "11.2.3 Opening the shredding chamber", page 45)**.



The blades can be sharpened without having to disassemble them. You can use a small angle grinder fitted with a grinding disc suitable for metal.

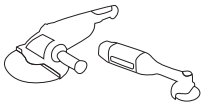

Each blade has two sides:

- • The front of a blade has two bevelled cutting edges. **(F)**
- • The teeth profile of the cutting area is clearly visible on the backside of a blade. **(B)**

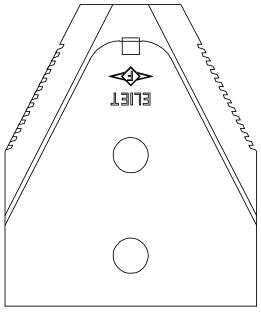

F

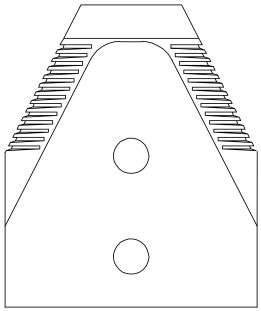

B

- As described in **"11.4.1 Checking the blades", page 52**, a sharp cutting edge and a correct cutting angle are essential for efficient shredding. These two blade properties are easily obtained by sharpening the blades correctly.
- When blades become blunt, their sharp cutting edges appear worn and take on a more noticeable ribbed appearance. **(1)**
- By grinding away some of the metal from the cutting edge, you can remove this ribbing and hone a sharp cutting edge. **(2)**
- To do so, move the grinding disc along the ribbed edge.
- Note: Regular sharpening will reduce the amount of metal you need to remove in order to obtain a sharp cutting edge again. As a result, you will spend very little time on this operation to obtain perfectly sharp cutting edges. (ELIET recommends grinding after every 10 working hours.)

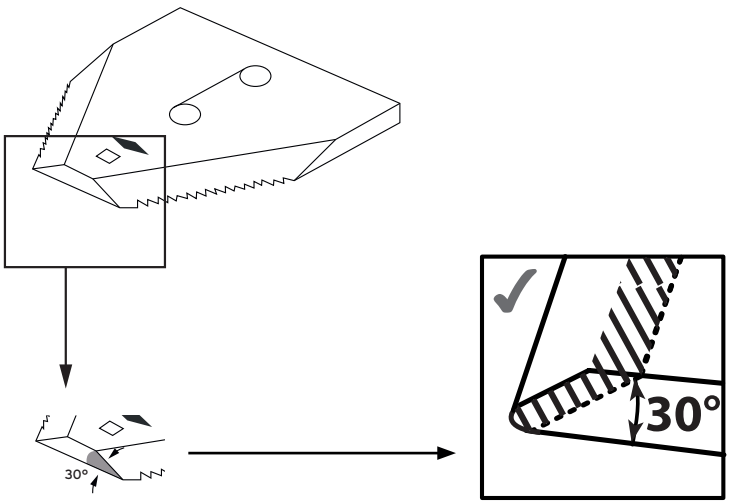

(1)

(2)

- Avoid grinding the same area for a long period of time. This will prevent local discolouration of the blades, which indicates overheating and a modification to the actual structure of the material (and its hardness) at that point.
- It is essential that you do not change the cutting angle of the blade as you are sharpening it. **(3: badly-sharpened blade)**

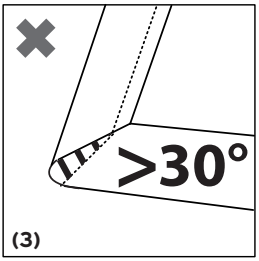

(3)

Failure to maintain the cutting angle by blunting the angle **(4)** or changing it in any other way **(5)** will cause the blades to become stuck while cutting wood, leading to a less powerful machine. A cutting angle that is too sharp **(6, 7)** will lead to weaker cutting edges, which will considerably reduce the lifespan of the blades **(see figures 4, 5, 6 and 7)**.

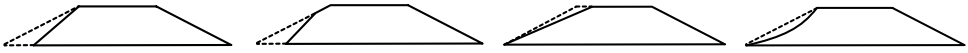
(4) **(5)** **(6)** **(7)**

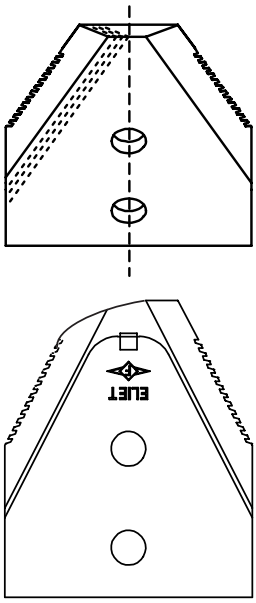

- Never grind the backside of a blade.
- The tip of a blade is subjected to the heaviest use during shredding. As such, sharpening the tip should only be done when strictly necessary to avoid weakening it.
- Each time a blade is sharpened, a bit of material is lost, reducing the active cutting edge. You can grind the cutting edge until you have reached halfway through the width of the tip of the blade. If you go beyond this limit, you could compromise the duration of the cutting edge that has not been used yet. Turn the blades when this happens
  ("11.4.3 Reversing and renewing the shredding knives (Turn Knives)",
  page 56).
- If the tip of a blade is rounded, shredding efficiency will be reduced. In that case, continued sharpening serves no purpose. This is the time to reverse or renew the blades **(see "11.4.3 Turning and replacing a blade (Turn Knives)", page 56)**.
- After you have finished sharpening the blades, carefully close the shredding chamber.

11.4.3. Turning and replacing a blade

If blades are sharpened at regular intervals, a duration in excess of 100 hours for each cutting edge can be obtained. Once one cutting edge has been worn down, a blade can be turned. This new cutting edge can also be used for 100 hours. Once both blade edges have been worn down, the blade itself will have to be replaced.

11.4.3.1. How to turn a blade



Wear protective gloves as the blades are razor sharp !



The blades are directly exposed as soon as the shredding chamber is open. Ensure that the machine has completely stopped.

- Turn the contact button on the machine to the "off" position and remove the spark plug cap.
- Open the shredding chamber.
- No tool is necessary for opening the chamber. It has a quick and easy-to-use system for opening and closing it.
- **See "11.2.3 Opening the shredding chamber", page 45** for the steps on how to do so.



The blades are extremely sharp. Avoid contact with the blades and always wear appropriate protective gear, such as gloves.

- Each blade is secured with two M8 bolts. Avoid injury to hands and always use two ring spanners with long handles to unscrew the bolts.
- If any of the bolts are damaged, they must be replaced immediately.
- Do not pull the blades out with your hands; use locking pliers instead.
- It is useful to put a conical wedge (like a flathead screwdriver) between the blade supports in order to remove the blades more easily.

There are certain rules that must be respected for turning or replacing a blade. The blade axle is divided into two groups to respect the logic of these rules:

Blade group 1: The two farthest blade disks belong to this group. **(E)**
Blade group 2: This group contains 3 blade disks that are enclosed in-between the two farthest blade disks. **(I)**

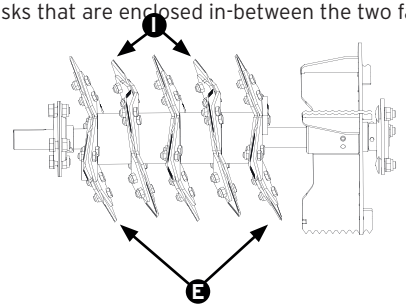

Each blade has two sides (illustration)
Front side (F): the side where the bevelled cutting edge is visible.
Back side (B): the side where the tooth profile is clearly visible.

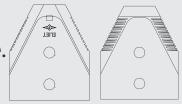

Dismantle, turn and reassemble the blades one by one so you do not place them incorrectly. It is better to proceed blade by blade so you do not overlook anything.

A Reversing the blades of group 1

Rule: Ensure that the blades in group E are always oriented with their back sides **(B)** facing the side walls of the shredding chamber.

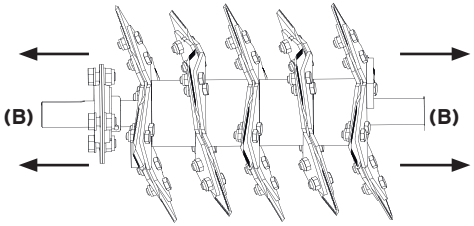

Perform the following steps to ensure that this rule is applied consistently.

- Remove a single blade from the left-side blade disc, rotate it 180° and put it back in the same position, but on the right-side blade disc. Rotate (180°) the blade previously removed from the right-hand blade disk, and fit it in the empty space in the left-hand blade disk. Repeat this procedure until all 8 blades
  from group 1 in both discs have been repositioned.
- Always clean the blades and blade axles before refitting them.

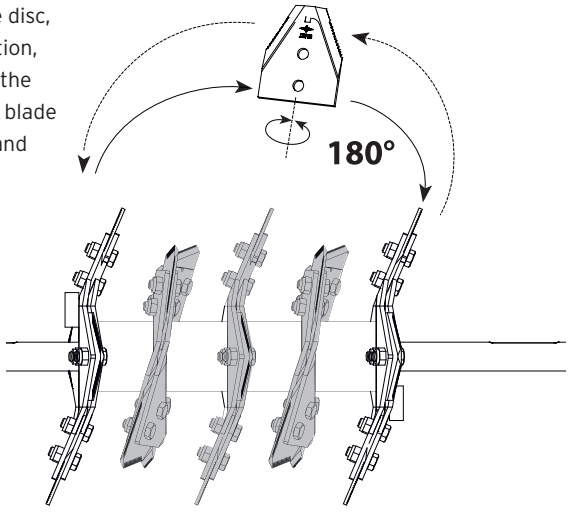

Turning / replacing blades in group 2.

- **Group 2**: for the discs located between the discs of zone E, proceed as follows: remove the blades from zone I and rotate them 180°, then re-install them on the other side. The blade that must be removed to make room for it is in turn turned 180° and inserted into the vacant hole. Repeat this process until all the blades have been reversed. When all the blades in zone I have been turned, they should all be oriented with the cutting edge (F) facing the blade shaft. If not, their positioning must be corrected.

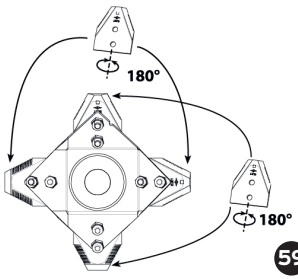

Perform the following steps to ensure that this rule is applied consistently.

- Remove two blades that are diametrically opposite each other. Rotate them 180° and reposition them. Do the same with the two remaining blades.
- Always clean the blades and blade axles before refitting them.



When fitting the blades, always position the nuts on the left-hand side of the blade plate. By applying this installation method, the nuts will automatically be tightened during shredding by the turning direction of the blade axle. As a reminder: Always position the nuts on the belt pulley side.

11.4.3.2. How to replace blades

- The new set of RESIST/8™ blades for the Vector can be obtained from your ELIET dealer under the reference: BU 401 200 302.
- Remove all M8 bolts securing the blades. Always use two ring spanners with long handles to unscrew these bolts.
- Do not pull the blades out with your hands; use locking pliers instead.
- It is useful to put a wedge (screwdriver) between the blade discs in order to remove the blades more easily.
- First remove any dirt between the blade discs before you insert a new blade. Use a painting knife to do this.
- Now carry out the steps that must be followed to turn the blades **(See "11.4.3.2 How to turn a blade", page 59)**.

Group 1: The back side **(B)** of each blade must face the wall of the shredding chamber.
Group 2: The front side**(F)** of each blade that is fitted into the rounded part of a disc must face the blade axle.

- Always use new nuts and bolts when replacing a blade.
- When refitting the shredding blades check that all bolts are tight **(See "16.2 List of torques", page 81)**.
- When tightening the bolts in the blade discs, always make sure the nut is located on the left side of the disc. As a reminder: All nuts in the blade axle must always be positioned along the side of the pulley belt.
- After turning or replacing the blades, always check the torque of the blade bolts and adjust if needed.



Check the torque of the blade bolts after the first 5 working hours!

Incorrectly or poorly installed blades may lead to the machine breaking down or being damaged. It will also put operators and bystanders in danger.



Failure to retighten the blades after the first 5 working hours and/or after turning or changing the blades may lead to the machine breaking down or being seriously damaged.

Any consequential damage that may arise from the poor maintenance of the blades will invalidate any applicable warranty claims.

11.4.4. Motor axle drive belt tension



Belt tension tips A belt will continually stretch throughout its life, so checking the tension every 20 hours of use is mandatory. Tighten it, if necessary.



When the belt is new, it will slacken more quickly during its first few hours of use. A check after the first 5 hours of use is imperative.
- Always turn off the engine before tightening the belt.
- Take off the protective cap on the right to access the belt.



Be careful when adjusting this drive belt, as your fingers could become trapped between the high-tension belt and a pulley wheel. So be careful and wear gloves. Make sure that nobody uses any element of the machine connected to the belt as you are checking the drive belt tension.

A. Measuring the belt tension

The importance of correct belt tension

- An overtensioned belt exerts force on bearings and spindles, and wears them down more quickly.
- If the belt is not under enough tension, it risks skidding or jumping out of the grooves of the pulley, leading to loss of efficacy, overheating, deforming and premature wear.

The principle of belt tension measurement: to measure the belt tension, determine the force required by pressing on the back of the belt half way between the two pulleys at a given stage. This force depends on the type of belt, the diameter of the pulleys, and the distance between the two pulleys.

The belt for the Vector is: Gates Quad Power XPB2280
(Order number: BA 521 322 800)
Diameter of the smallest pulley: 140 mm
Distance between pulleys:
Deviation: 10 mm
Force to be applied: 70 N (7 kg)

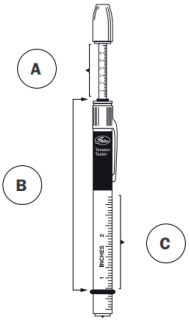

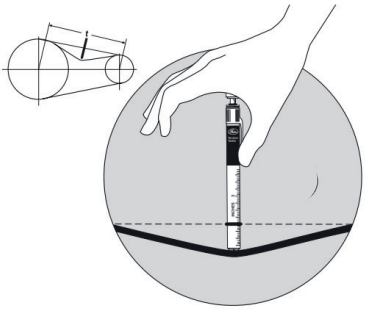

To measure the belt tension, use a measurement gauge (reference: B.....).
A. Scale for measuring the deflection force
B. Rubber rings
C. Scale for measuring the deflection distance

This tensiometer has two scales: the scale on the fixed part indicates the deviation, the scale on the moving part indicates the force.

Procedure to be followed

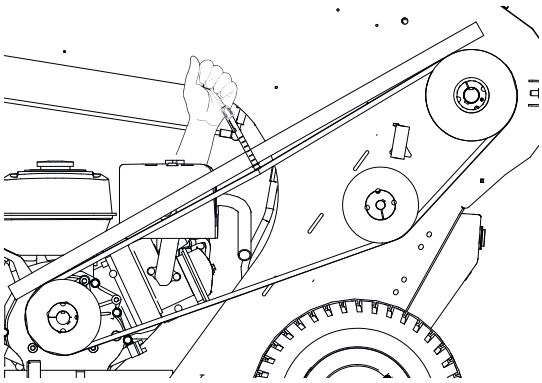

- Determine the centre between the two points of contact of the belt with the pulleys and make a mark at this point with a felt tip pen.
- Place a straight batten against the outer circumference of both pulleys so that it is in contact with the belt along its entire length.
- Slide the rubber ring (1) onto the scale of the fixed part (deflection distance) of the gauge at 10 mm.

- Slide the small rubber ring (2) over the gauge on the moving part (Deflection force) until it touches the fixed part.
- Now place the tensiometer with the fixed part on the back of the belt where you made the mark. When doing this, place the gauge perpendicular to the belt.
- Now press the rubber end of the moving part of the gauge towards the belt. The belt bends under the effect of the force exerted. The extent of the deviation is easy to see in relation to the straight bar that indicates the initial situation. Press until the ring (2) is flush with the bottom of the batten. Note: do not press beyond this point.
- By pressing the tension gauge, the moving part also moved into the fixed part, causing the small ring (2) to move on the scale. When the tensiometer is removed from the belt, the applied pressure force can be read where the small ring 2 is on the scale.
- This indication must be 70 N.
- If the force is too low, the belt must be tightened.

B) Re-tensioning the belt

- The belt is tensioned by pushing the engine block towards the front of the chassis. First, loosen the four M8 bolts on the engine base (2x 13 mm wrench) and loosen the tensioning screw (M10) on the front of the frame (17 mm wrench).
- Push the engine back in using the bolt (M10) at the back of the engine assembly after loosening the lock nut. Before loosening the engine, place two marks on the frame plate on the sides

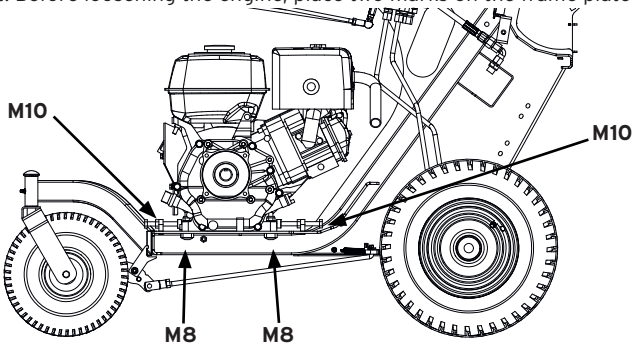

of the engine assembly with a marker. This will save you time when aligning the pulleys later.
- Once the correct belt tension has been obtained, straighten the engine position by moving the M 10 front pressure screw (17 mm wrench). Use the markers made with the marker.



Caution:
Always check that the pulleys are aligned and mounted correctly. Misalignment reduces the performance and life of the belt drive.

The main causes of misalignment are:

- The pulleys are badly positioned on the axes;
- The engine and driven shafts are not parallel;

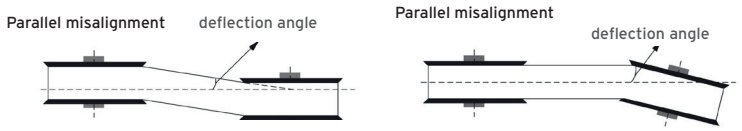

- The alignment of the two pulleys can now be fine-tuned by tightening the pressure screw (M10) at the front of the engine towards the rear. Place a metal ruler straight to check that there is no gap between it and the pulleys. The pulleys are properly aligned when the metal ruler placed against the pulleys touches the four points indicated.

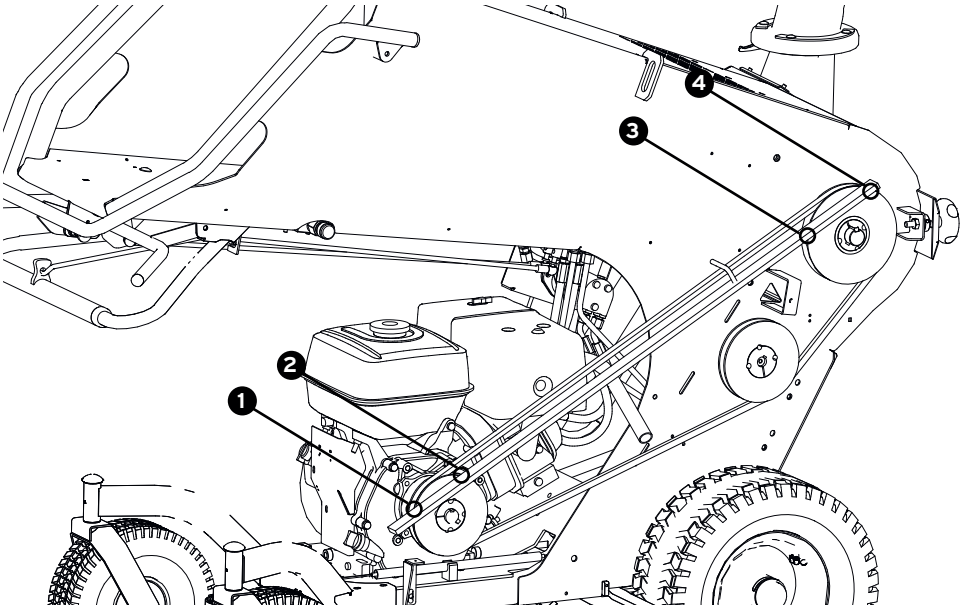

- Once the tension has been properly adjusted, tighten the locknuts on the two M10 pressure screws to lock them in place.

TENSION + GOOD ALIGNMENT = LONG BELT LIFE

- After setting the required tension and alignment, the engine can be reattached by firmly tightening the four engine bolts (M8) (2x 13 mm wrenches).
- Only at the end, after a final check of everything, can the protective covers be put back in their original position.

B. Checking the tension of the feed roller transmission chain



Before beginning any maintenance work, always turn off the engine. As a precaution, remove the spark plug wire.

- Remove the chain guard
  (See "11.2.2 Removing the chain guard", page 44)
- Check the tension of the chain. The tension is correct if you can displace the chain 5 mm from its initial position without too much effort. If you can move it further than this, you need to increase the tension.
- If the chain is too slack, loosen the bolts **(1 & 2)** (M8 SLW 13).
- Make the chain taut by tightening the nut**(3)** on the threaded rod. (M6 slw10)

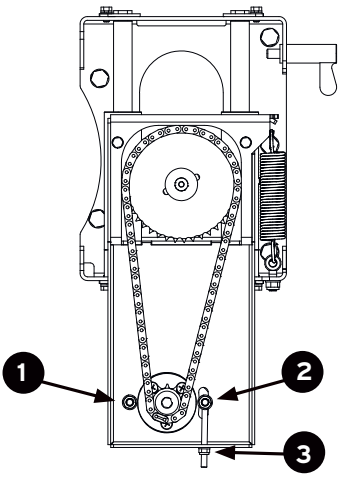

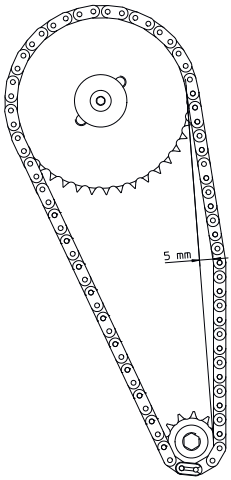



The chain cannot be put under too much tension.

- When the chain tension has been adjusted to the correct value, retighten the bolts **(1 & 2)** (M8 SLW 13).
- Refit the chain guard.
  (See "11.2.2 Removing the chain guard", page 44)
- Lubricate the chain properly.
- Take the opportunity to lubricate the pin guides.
- Refit the chain guard.

11.4.5. Checking and adjusting the tension of the tracks (Cross Country model)

A. Checking for correct tension

- The track is sufficiently taut if it comes 4 cm off the upper guide when it is lifted without any effort.
- If the track comes off more than 1 cm, the tension needs to be corrected.

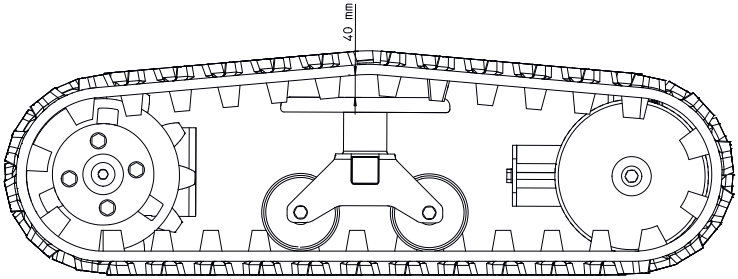

B. Adjusting the tension

- Unfasten the locknut **(2)** and the two bolts of the tensioner (M10 wrench 17)
- Unfasten the 4 fixing bolts of the front axle. **(3)** (M8 slw13).
- Refasten the central bolt **(1)** (M10 slw17) to adjust the track tension. (turn clockwise)
- Check the tracks again for correct tension and tighten the central bolt (1) even more if necessary (or loosen it if the track is now too taut).
- Remember to refasten the clamping bolts **(3)** as well as the locknut **(2)**.

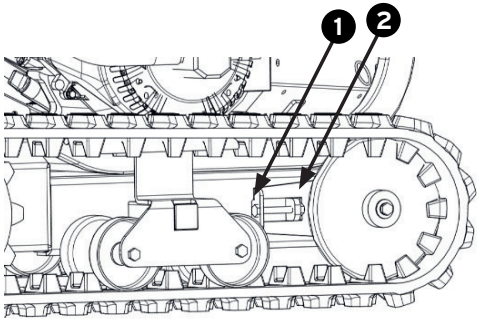

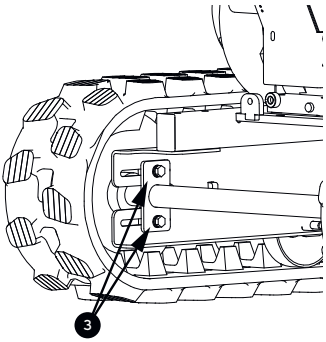

11.4.6. General lubrication

Given that shredders often operate in extreme conditions, ELIET believes it is important to use high-quality materials. ELIET therefore recommends the use of special lubricants from the assembly stage onwards.

The following parts require regular lubrication:

- Pivot points and friction surfaces
  (See "11.4.8.1 Lubrication of pivot points and friction surfaces", page 66).
- Grease zerks **(See "11.4.8.2 Greasing via the existing grease zerks", page 66)**.
- Bearings **(See "11.4.9 Lubricating the bearings", page 67)**.
- Chains and gears **(See "11.4.10 Lubricating the chains and the gearwheels", page 67)**.



Before any lubrication, make sure to switch off the engine and to remove the spark plug cap. Gloves must also be worn while performing this maintenance work.

11.4.7. Lubrication of pivot points and friction surfaces

This group includes, among others, the following locations on the machine:

A. Wheel control handle pivot points.

B. Guiding blanking plate for the feed roller.

C. Throttle control lever pivot point and the starter lever.

D. Hinges of the rear shredder chamber access hatch.

E. Safety bar pivot points.

F. Feed roller controls.

G. Wheel brake guide.

H. Parking brake foot pedal.

I. Blow chute pivot point.

J. The hinging point on the deflector flap.

K. Feed roller hinges (2 grease zerks).

L. Rear wheel axles (grease zerks).

M. Swivel wheels (grease zerks).

N. Rear hatch locking knob

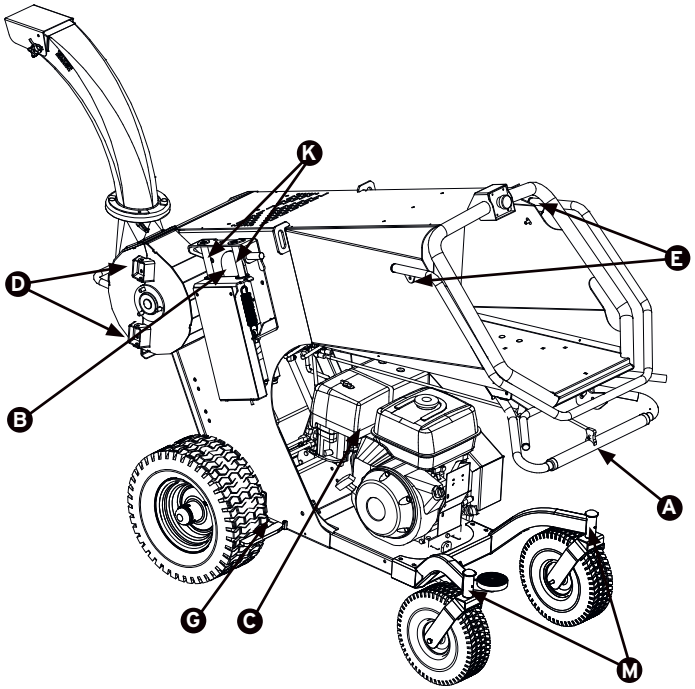
K
D
E
B
A
G
C
M

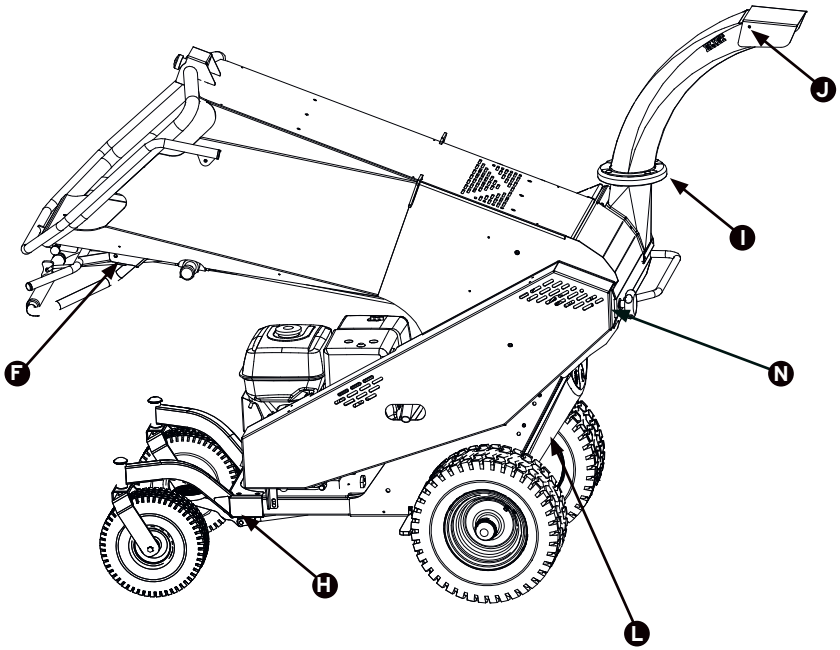
J
I
F
N
H
L

- Whenever possible, disassemble the hinge or pivot point.
- Spray some penetrating oil containing molybdenum disulphide onto the frictions surfaces and allow the oil to penetrate.
- Wipe away all traces of old lubricant and dirt.
- Should some parts not be accessible, use compressed air to remove all traces of old lubricant and dirt from the joints and pivot points.
- When pivot points are clean, apply new lubricant.
- ELIET recommends Novatio Clear Lube as a lubricant for pivot points and rolling bearings. Novatio PFT lubricant is more suitable for friction surfaces.
- Wipe away any excess lubricant.

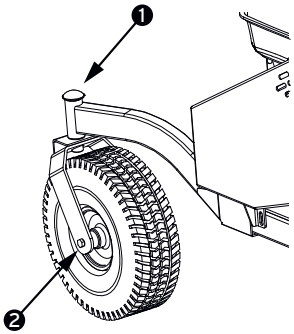

11.4.8. Lubricating using the grease zerks

11.4.8.1. Grease zerks for small doses

This group includes, among others, the following locations on the machine:

Grease zerk on the pivot point of the swivel wheels. **(1)**

Grease zerks on the bearings of the swivel wheels. **(2)**

11.4.8.2. Grease zerks for large doses

- The two grease zerks of the feed roller hinges (nº1), **(See "11.2.2 Removing the chain guard", page 44)**
- The two grease zerks of the transmissions in the rear wheels (nº2)

Use the following procedure:

- Clean the grease fitting.
- Use a suitable grease pump to inject fresh grease into the grease fitting.
- ELIET recommends Sunoco Multi Purpose grease.
- Pumping the grease gun one or two times is sufficient to inject enough grease.
- Wipe away any excess grease that comes out of the joints.

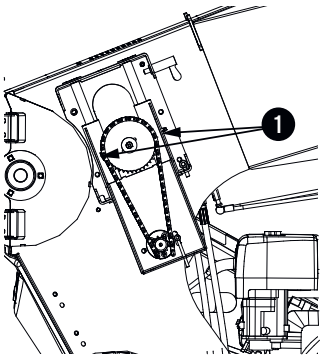

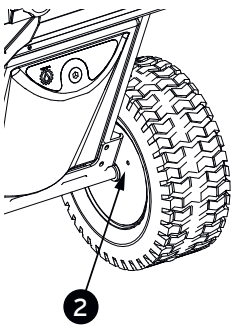

11.4.9. Lubricating the bearings

This group includes, among others, the following locations on the machine:
Bearings in the blade axle

Use the following procedure:

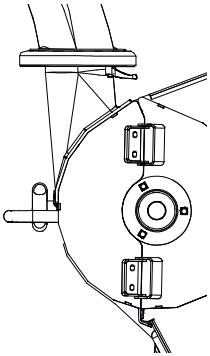

- Spray some penetrating oil containing molybdenum disulphide onto the bearing and the area around it, and allow the oil to penetrate.
- Wipe away any dirt stuck to the outside of the bearing.
- Spray more penetrating oil into the bearing joints.
- Turn the bearing. You could even start up the mechanism that turns the bearing (caution: make sure that all dangerous areas are adequately shielded).
- Wipe away any dirt that is forced out by the penetrating oil.
- Use compressed air to remove excess penetrating oil from the bearing and the bearing joints.
- Apply new lubricating oil. ELIET recommends Novatio Clear Lube as a lubricant.
- Wipe away any excess lubricant.

11.4.10. Lubricating the chain and cogs

This group includes the following locations on the machine:
Chain drive of the feed roller. Use the following procedure:

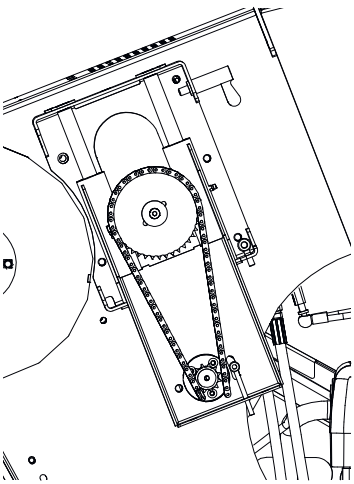

- Remove the guards to expose the chain.
  (See "Removing the chain guard", page 44).
- Wipe away all grease and lubricant in and around the drive.
- Spray penetrating oil containing molybdenum disulphide to dissolve dirty lubricant.
- Apply fresh lubricant once the drive has been cleaned.
- Use a small brush to apply grease to the teeth of the cogs. Use Sunoco Multi Purpose Grease or a product of the same quality.
- It is better to use a liquid lubricant on chains so that it can penetrate into them. ELIET recommends using Novation Clear Lube spray.
- After applying the lubricant, carefully refit the guards, trying as much as possible to keep out dust and dirt.

All of these products are available from your ELIET Dealer.

11.5. Maintenance schedule.

On the front of the engine, near the on/off button, you will find a display telling you how many hours the engine has been running for.

	Working hours	Engine hours
hours	"11.5.2 Daily maintenance", page 71	
5	**Lubrication** 5	**Cleaning the air filter** "11.1.3 Cleaning the air filter (Clean air filter)", page 51
10	**Routine inspection of the blades** "11.4.1 Checking the blades", page 53	**Draining the engine oil** "11.3.2 Draining the engine oil (Engine Oil)", page 50
25	**Lubrication** "11.4.9.2.1 Grease zerks for small doses (Lubrication)", page 65	**Draining the engine oil** "11.1.2 Draining the engine oil (Engine Oil)", page 50
50	**Checking belt tension** "11.4.4 Checking the drive belt tension (Chk Belt Tens.)", page 61	**Cleaning the air filter** "11.1.3 Cleaning the air filter (Clean air filter)", page 51
100	**Turning blades** "11.4.3 Turning and replacing a blade (Turn Knives)", page 57	
200	**Changing blades** "11.4.3 Turning and replacing a blade (Turn Knives)", page 57 Replacing belts "11.4.6 Changing the belt (Replace Belts)", page 63	**Replacing the air filter** "11.1.4 Replacing the air filter", page 51
500	**Replacing the hydraulic oil** "11.1.5 Replacing the hydraulic oil and filter", page 52	

11.5.1. Special maintenance

A. Special maintenance of the blades

After inserting the blades into the axle, they will need a short running-in period. This could lead to a loosening of the bolts. The blades could even come loose over time and become wedged between the blade discs. This can cause irrevocable fatigue failure of the blade axle. This avoidable damage must be prevented by scheduling extra maintenance after the brief running-in period.

- **When:**
  Within the first 5 engine hours after starting up the new machine.
  Within the first 5 hours after turning the blades.
  Within the first 5 hours after replacing the blades.
- **What:**
  Check all blade bolts for correct torque loading and retighten if considered necessary.
  (Torque loading **see "16.2 List of torques", page 81)**



Failure to perform this special maintenance will compromise the safety of the operators and bystanders and can cause serious damage to the machine.

B. Special maintenance of the drive belt

The belt that transfers power from the engine to the blade axle is long. During the running-in period, the belt will stretch naturally. This stretching will reduce the tension of the belt. Using the machine when the belt tension is too low will cause the belt to slip, twist or come off the rollers. These three possibilities will have a detrimental effect on a new belt.

- **When:**
  Within the first 10 engine hours after starting up the new machine.
  Within the first 10 hours after changing a belt.
- **What:**
  Check the belt tension
  (see "11.4.4 Motor axle drive belt tension (Chk Belt Tens.)", page 60)

C. Special maintenance related to replacing the engine oil

All wear-and-tear particles and manufacturing dirt that is created or is still present in the engine will be captured by the oil. The fine particles that are not filtered out of the oil will be cleared out by this special maintenance.

- **When:**
  Within the first 20 engine hours after starting up the new machine.
- **What:**
  Drain the engine oil **(see "11.3.2 Draining the engine oil (Engine Oil)", page 49)**

11.5.2. Daily maintenance



Before performing any maintenance, stop the engine and remove the spark plug cap. Wear appropriate clothing.

- Check for signs of leakage.
- Open the shredding chamber **(See "11.2.3 Opening the shredding chamber", page 45).**
- Clean the machine **(see "9.7 Cleaning the machine", page 40)**.
- Check the condition of the blades and sharpen them if necessary; also check that the blades are securely fastened
  (see "11.4.1 Checking the blades", page 52).
- Check the machine for signs of abnormal wear or cracks.
- Check the ejection turbine for signs of abnormal wear or cracks.
- Check the bolts (blades, wheels, bearings, engine, etc.).
- Check the oil level in the engine crankcase
  (see "11.3.1 Checking engine oil level + refilling", page 48).

11.5.3. Maintenance after 5 hours



Before performing any maintenance, stop the engine and remove the spark plug cap. Wear appropriate clothing.

- Carry out daily maintenance **(see "11.5.2 Daily maintenance", page 70).**
- Clean the air filter **(see "11.3.3 Cleaning the air filter (Clean air filter)", page 50)**.

11.5.4. Maintenance after 10 hours



Before performing any maintenance, stop the engine and remove the spark plug cap. Wear appropriate clothing.

- Carry out daily maintenance **(see "11.5.2 Daily maintenance", page 70)**.
- Inspect the blades, and if necessary
  , sharpen them (see "11.4.1 Checking the blades", page 52).
- Cleaning the air filter

11.5.5. Maintenance after 20 hours



Before performing any maintenance, stop the engine and remove the spark plug cap. Wear appropriate clothing.

- Carry out daily maintenance **(see "11.5.2 Daily maintenance", page 71).**
- Drain the engine oil **(see "11.1.2 Draining the engine oil (Engine Oil)", page 50)**.
- Adding grease to the various grease zerks **(see "11.4.8 General lubrication (Lubrication)", page 65)**.

11.5.6. Maintenance after 50 hours



Before performing any maintenance, stop the engine and remove the spark plug cap. Wear appropriate clothing.

- Carry out daily maintenance **(see "11.5.2 Daily maintenance", page 70).**
- Check the belt tension **(see "11.4.4 Motor axle drive belt tension (Chk Belt Tens.)", page 61).**
- Check the chain tension and, if necessary, adjust the tension **(see "11.4.7 Checking the tension of the drive chain for the feed roller", page 64)**.
- Conduct general lubrication **(read "11.4.9 General lubrication", page 65)**.

11.5.7. Maintenance after 100 hours (or every six months)



Before performing any maintenance, stop the engine and remove the spark plug cap. Wear appropriate clothing.

- Carry out daily maintenance **(see "11.5.2 Daily maintenance", page 71).**
- Maintenance after 50 hours **(see "11.5.6 Maintenance after 50 hours", page 72).**
- Reverse RESIST™ **blades (see "11.4.3 Turning and replacing a blade", page 57)**.
- Replace the oil **(see "11.3.2 Draining the engine oil", page 50)**.

11.5.8. Maintenance after 200 hours (or annually)



Before performing any maintenance, stop the engine and remove the spark plug cap. Wear appropriate clothing.

- Maintenance after 100 hours
  (see "11.5.7 Maintenance after 100 hours (or every six months)", page 72).
- Clean the air filter **(see "11.3.3 Cleaning the air filter (Clean air filter)", page 51)**.
- Replace RESIST™ **blades (see "11.4.3 Turning and replacing a blade", page 57)**.
- Replace the air **filter (see "11.3.5 Replacing the air filter", page 51).**
- Replace the engine fuel filter
  (read "11.3.6 Replacing the engine fuel filter (Oil filter)" on page).
- Replace the spark plug (read the engine manual).
- Check the tracks
  (see "11.3.5 Checking and adjusting the tension of the tracks (Cross Country model)", page 64).
- After performing maintenance or repairs, make sure that you refit everything. (As well as the protective guards)

11.5.9. Maintenance after 500 hours (or annually)

Drain the hydraulic oil and replace the filter **(see "11.3.8 Replacing the hydraulic oil and the filter", page 52 in "11.3.7 Replacing the hydraulic oil", page 52)**.

12. Storing the machine



- Clean the machine **(see "11.5.2 Daily maintenance", page 70)**.
- Always allow the machine to cool down before storage.
- If the machine is to be stored outside, it must be well protected by a tarpaulin. Try to avoid allowing the machine to be exposed to bad weather. At ELIET, we strongly recommend that the machine be stored in a dry, sheltered area.
- When stocking the machine for longer periods, follow these steps:
- Perform the "after 50 hours" maintenance steps **(see "11.5.6 Maintenance after 50 hours", page 71)**.
- Check all nuts and bolts for correct tightness, retighten them if necessary.
- Touch up or lubricate areas where the paint coating has been removed to prevent rusting. Original ELIET paints in the same colour are available from your ELIET dealer **(article number: BX 043 200 400)**.

13. Option

You can equip your shredder with a speed regulator, which will enable you to regulate how much oil is being supplied to the feeder, thereby increasing or decreasing the speed at which material is fed into the machine. **Contact your local ELIET dealer.**

14. Equipment specifications

MODEL	Vector On wheels	Vector Cross-Country
Drive	Honda GX 390	
Engine starting system	Manual	
Type	Petrol	
Number of cylinders	1	
Cylinder (cc)	389 cm^3	
Power in kW/Hp DIN (rpm)	8.7/ 11.7 (3600)	
Engine cooling system	Air cooling system	
Fuel tank capacity	6.1 L	
Max. branch diameter	80 mm	
Output	3 m^3 wood chips/hour	
Blade axle	5 disks, 20 ELIET Resist™ blades/8.3	
Cutting frequency	53,000 cuts/min	
Transmission	Belt V-type XPB 2280	
Feed roller drive	hydraulic Ø 156 mm	
Hydraulic fluid tank	8.3 L	
Battery	-	
Power control	Manual	
Guaranteed ergonomic feed height	feeding height: 1,000 mm / opening 520 x 540 mm **Vector STD / PRO / OW** 1000 mm / opening 520 x 450 mm **Vector CC** 1030 mm / opening 520 x 450 mm	
Discharge system	discharge height 1,500 mm / projection distance 0.8 m<>8 m **Vector STD / PRO / OW** 1530 mm **Vector CC** 1560 mm	
Dimensions (LxWxH)	1750x750x1520 mm	1750x750x1540 mm
Max work dimensions	**Vector STD / PRO / OW** 2140 x 750 x 1530 mm	**Vector CC** 2140 x 750 x 1560 mm
Storage dimensions	**Vector STD / PRO / OW** 1790 x 750 x 1510 mm	**Vector CC** 1790 x 750 x 1540 mm

Wheel / track drive	2 x hydraulic motors (32 cc)	2 x hydraulic motors (160 cc)
Wheels/Tracks	Wheels 6.5 x 8"	Tracks 150 x 72 x 34
Weight	265 kg	325 kg
Speed regulator	Option	Option
Agricultural wheels	Option	-

MODEL	Vector STD	Vector PRO
Drive	Honda GX 390	
Engine starting system	Manual	
Type	Petrol	
Number of cylinders	1	
Cylinder (cc)	389 cm^3	
Power in kW/Hp DIN (rpm)	8.7/ 11.7 (3600)	
Engine cooling system	Air cooling system	
Fuel tank capacity	6.1 L	
Max. branch diameter	80 mm	
Output	3 m^3 wood chips/hour	
Blade axle	5 disks, 20 ELIET Resist™ blades/8	
Cutting frequency	53,000 cuts/min	
Transmission	Belt V-type XPB 2240	Belt V-type XPB 2280
Feed roller drive	-	hydraulic Ø 156 mm
Hydraulic fluid tank	-	8.3 L
Battery	-	
Power control	Manual	
Guaranteed ergonomic feed height	feeding height: 1,000 mm / opening 520 x 540 mm On Road: feeding height: 1,160 mm / opening 520 x 540 mm	
Discharge system	discharge height 1,500 mm / projection distance 0.8 m<>8 m Blow chute height for transport (H: 1,500 mm)	
Dimensions (LxWxH)	1750x750x1520 mm	1750x750x1520 mm
Noise level	118 dB(A)	
Wheel drive	-	

Wheels	Wheels 6.5*8"	Wheels 6.5*8"
Weight	234 kg	257 kg
Speed regulator	-	Option
Agricultural wheels	Option	

15. EC Declaration of Conformity



Vector machine

Order code: MA 034 000 209 ..... Vector STD
Order code: MA 034 010 209 ..... Vector PRO
Order code: MA 034 020 209 ..... Vector On Wheels
Order code: MA 034 030 209 ..... Vector Cross-Country

The previously mentioned machine has been designed and manufactured to comply with the following European CE regulations:

EN 13515: Forestry machinery: wood chippers - safety

The ELIET manufacturing company hereby declares that it has conducted a risk analysis, and that it is fully aware of the potential hazards and risks associated with the machine. With this in mind, all necessary measures have been taken in accordance with Machine Directive 2006/42/EC in order ensure the complete safety of the operator when the machine is used correctly.
To determine the values of the A-weighted and guaranteed sound power levels in accordance with Directive 2000/14/EG, annex III/B 50, the measurement regulations indicated in European Standard EN 13515 were followed.

Acoustic level measured: 115 dB(A)
Guaranteed acoustic level: 118 dB(A)

Date: 01/2021
Signature:
Frederic LIETAER
CEO **ELIET EUROPE NV**

ELIET EUROPE NV
Diesveldstraat 2
B-8553 Otegem
Belgium
Tel: +32 56 77 70 88
Fax: +32 56 77 52 13
E-mail: info@eliet.eu **W.** https://www.elietmachines.com/

16. Annexes

16.1. Specifications for lubricants and fuel

Engine oil ..... synthetic oil SF, SG, SH, SJ
Viscosity ..... SAE 5 W 30 / SAE 10 W-30
Capacity of crankcase of engine GX 390 13Hp ..... 1.1 L

Fuel ..... E5 unleaded gasoline
Octane rating ..... at least RON 85
Capacity of fuel tank ..... 6.1 L
Hydraulic fluid ..... Conforms to DIN 51524 Part 3 HVLP

Viscosity ..... ISO VG 46 cSt
Capacity of hydraulic system ..... 8.8 L

Brands
SUNOCO ..... Sunvis 846 WR HV
ELF ..... Hydrelf DS 46
SHELL ..... Tellus TD 46
TOTAL ..... Equivis ZS 46
CASTROL ..... Anvol WG 46
TEXACO ..... Rando HDZ 46
MOBIL ..... DTE 15 M
ESSO ..... Univis N 46

Lubricant for bearings ..... NOVATIO CLEAR LUBE
Lubricant for pivot points ..... NOVATIO CLEAR LUBE
Lubricant for friction surfaces ..... NOVATIO PTFE OIL
Lubricant for chain transmission ..... NOVATIO CLEAR LUBE
Lubricant for grease fittings ..... SUNOCO MULTI PURPOSE LR EP2

* The information provided is purely advisory. Check the engine manufacturer manual for more information.

16.2. Torque chart

Bolt head according to DIN 931, 912		Resistance	
	Thread	**8.8**	**10.9**
Standard thread	M4	3.0	4.4
	M5	5.9	8.7
	M6	10	15
	M8	25	36
	M10	49	72
	M12	85	125
	M14	135	200
	M16	210	310
	M18	300	430
	M20	425	610
	M22	580	820
	M24	730	1050
	M27	1100	1550
	M30	1450	2100
Fine thread	M8 x 1	27	35
	M10 x 1.25	52	69
	M12 x 1.5	89	130
	M14 x 1.5	145	215
	M16 x 1.5	225	330
	M18 x 1.5	340	485
	M20 x 1.5	475	680
	M22 x 1.5	630	900
	M24 x 2	800	1150
	M27 x 2	1150	1650
	M30 x 2	1650	2350

(friction factor ↔ = 0.14)

16.3. Troubleshooting

16.3.1. Blade axle becomes blocked

- Switch off the machine.
- Open the shredding chamber.
- Completely empty the shredding chamber and make sure that no pieces of wood are wedged in the blade axle. Check the ejection turbine to make sure that no pieces of wood are wedged between the blades and the chassis.
- Ensure that the axle is completely liberated by making the propellers complete a full turn.



Always wear protective gloves, as the blades are razor sharp.

16.3.2. Engine cuts out

- Check that the emergency stop button has not been accidentally activated. (in the case of the Vector STD, check that the emergency bar has not been accidentally activated.)
- Check that the fuel tap is open.
- Check the fuel level and, if necessary, top it off.
- Check that the machine is not being tilted too much.
- Check the engine oil and, if necessary, top it off.
- If the oil level is okay, the problem could also be caused by an electrical defect.

16.3.3.The engine does not start

- The rear hatch has not been locked correctly, or the emergency stop button has been pressed.
- Problem with the electrical system.
- Check that the spark plug cap is seated correctly.
- There is no fuel in the tank, or the fuel tap is closed.
- Dirt in the fuel tank
- The on/off switch is set to "OFF"
- The engine oil level is too low.

16.3.4. Reduction in power

- Dirty air filter.
- Defective spark plug.
- Blunt blades.
- The engine speed has not been set properly

- There is a blockage in the shredding chamber
- The tension of the trapezoidal belt is wrong.
- has not been set correctly.

16.3.5. Wheel drive/tracks do not function when gas engine is running (Vector 4S ON WHEELS, CROSS COUNTRY)

- The feed roller control has not been correctly placed in its neutral position.
- Incorrect tension of the trapezoidal belt.
- A problem with the hydraulics.

16.3.6. The feed roller does not respond (Vector 4S PRO, ON WHEELS, CROSS COUNTRY)

- The emergency stop bar has not been correctly placed in its work position.
- Problem in the hydraulic circuit (valve).
- Broken chain.
- Incorrect tension of the trapezoidal belt.

16.3.7. The engine cut out and the machine must be moved (Vector 4S ON WHEELS)

- If the engine is not running, the wheels are no longer supplied with power.
- If you turn the traction control, you will still be able to move the machine slowly by pushing it in the direction that corresponds to the control (using your arm strength).

16.4. Warranty conditions

Dear Customer,

We thank you for purchasing an ELIET product. Congratulations on your purchase of this machine, which is sure to far exceed your expectations over the coming years. At Eliet, we do everything to ensure that our products function correctly. That is why your product qualifies for a two-year warranty.

What is the warranty?

The design and manufacturing processes for ELIET products are subject to very strict quality regulations. The purpose of these regulations is to guarantee a long service life and permanent safety. That is why at Eliet, we are willing to repair at no charge hidden defects or faults during the whole run-in period (aka the warranty period), provided the prescribed procedure is followed.

Warranty conditions

ELIET's warranty obligation for new machines is governed by the following conditions.

I. Warranty period

The warranty period starts the day the dealer delivers the machine to the customer (maximum one week after the purchase) and expires:

- after two years of private use.
- after twelve months or 100 running hours of rental use.
- after twelve months or 100 running hours in semi-professional or in professional use.
- To be eligible to obtain warranty the customer is invited to register the newly purchased machine with ELIET. You should complete the registration online on Eliet's website: https://www.elietmachines.com/

II. What is not covered by the warranty?

- Wear items are not covered by the warranty conditions: (such as blades, bearings, belts, chains, gearwheels, tyres, bulbs and fuses).
- If failures are found to be caused by improper use, neglect or consequential damages by an external source (fall, chippings, foreign objects, accident).
- If failures are found to be caused by improper maintenance of the machine, that is not in accordance with the prescribed periodic maintenance.
- Defects caused by improper repair done by anyone other than an authorised ELIET dealer or after using non-original ELIET replacement parts.
- When the defect is caused by making improper changes to the original design of the machine.
- When the fault develops when the machine has been used not in accordance with the instructions contained within this manual.

- When the prescribed warranty procedure has not been adhered to or when the warranty period has expired.
- For all problems relating to the motor, please contact an authorized service centre of the engine manufacturer.

III. Procedure

- **Step 1**: The customer is required to keep the purchasing invoice until the warranty period has expired. The customer is required to register their purchase on https://www.elietmachines.com the day they come into possession of the machine.
- **Step 2**: In the event of a defect becoming apparent, the customer shall have this verified by the authorized ELIET dealer. If the dealer feels that there is a factory defect, the dealer may invoke the warranty, under the terms specified.
- **Step 3**: Every warranty claim must be accompanied by a fully-completed official claim form. Copies of this warranty application are available to dealers at ELIET or even at an importer/agent.
- **Step 4**: The dealer shall then order the replacement parts needed to perform the repairs. Next, the dealer faxes the order form together with the completed warranty form and a copy of the registration card.
- **Step 5**: The warranty claim form must be attached to the purchase invoice and mailed to ELIET or to an ELIET importer/agent.
- **Step 6**: ELIET will send the parts ordered to the dealer under the regular delivery and payment conditions.
- **Step 7**: The defective part will be examined by the technical department first prior to approving or rejecting the warranty. ELIET reserve the right to solely decide whether or not the customer has complied with the conditions for the validity of this guarantee, i.e. 1 year or 2 years. Faulty components shall become the property of ELIET.
- **Step 8**: When a warranty claim is found to be valid, ELIET will credit the warranty parts. The cost of labour is not covered by ELIET.

IV. In case of damage during transport

- All goods are considered purchased as of the moment they leave the factory. Risks related to transport are to be borne entirely by the customer.
- It follows, that ELIET highly recommend to check the goods for damage on arrival.
- Any damage found should be stated on the delivery form before signing. Make sure the driver of the haulage company puts his signature next to the damage on your copy.
- The insurance company will not accept any liability if there is no written and signed declaration of damages on the delivery invoice.
- Damages can be claimed from the hauler using a copy of the delivery form and a covering letter stating your complaint.
- The machine must be kept in its original state until it has been examined by the insurance provider of the hauler.

BZ 201 530 003 - 09/2024