ELIET®

MANUAL

Turfaway 600



This manual contains practical information regarding the use and maintenance of the machine. **Read it carefully and keep the manual in a safe place.**



Please also keep your **purchase invoice** or receipt together with this booklet.



Register your purchase online at **www.eliet.eu.**

© ELIET
Copyright 2020 ELIET. All rights reserved. The texts, images and other information in this manual are protected by copyright and also by other intellectual property rights. As such, no parts of this manual may be used for commercial or other purposes. Certain parts of this manual are also protected by copyright owned by Eliet suppliers.

1. Introduction



1.1. Carefully read this user manual

ELIET machines are designed for safe and reliable use if they are operated in accordance with the instructions provided. Carefully read these operating instructions before using the machine. Failure to do so may result in personal injury or damage to the equipment.

1.2. Identification data – ELIET Turfaway600

Copy the identification data of your machine into the text boxes:

Type number:	
Engine:	
Serial number:	
Year of Manufacture:	

2. Warranty



2.1. Machine registration

To be entitled to warranty, the machine has to be registered online within one month after purchase at: **www.eliet.eu**

European customers:
ELIET EUROPE NV
Diesveldstraat 2
8553 Otegem
T (+32)(0)56 77 70 88 - **F** (+32)(0)56 77 52 13
e-mail: info@eliet.eu, www.eliet.eu

US customers:
ELIET USA Inc.
3361 Stafford Street
Pittsburgh, PA 15204
Tel +1 412 367 5185 - **Fax** +1 412 774 1970
e-mail: info@elietusa.com, www.elietusa.com

Check the warranty conditions (read § 16; page 86)

3. Welcome



Welcome to the family of ELIET users.

We thank you for the trust that you have placed in ELIET and we are convinced that you have purchased the very best machine. The operating life of your ELIET machine depends on how you care for your machine. This manual and the engine manual included will help you on your way. Strict adherence to the instructions and suggestions in these manuals will guarantee optimum performance of your ELIET machine for a very long time.

Read this manual carefully before operating the machine. This will prevent you from operating the device incorrectly.
For your own safety, please observe the safety instructions specified in the relevant chapter. Even if you are familiar with operating similar equipment, it is still advisable to read these pages carefully.

All ELIET equipment and machines are continually updated and improved; as such, we reserve the right that the specifications of your machine may differ slightly in terms of shape, technology and accessories. The descriptions and technical data in this manual are valid at the time of publication. Certain illustrations and descriptions may not apply to your specific machine, but instead relate to a different version of the machine. For this reason, we trust that you appreciate the fact that discrepancies or deviations in the texts and illustrations in this manual cannot give rise to any claims. If you still have questions after you reading this manual, please contact your ELIET dealer. Find an authorised ELIET dealer near you at **www.eliet.eu.**

ELIET AT YOUR SERVICE

During office hours, ELIET's help desk will make every effort to answer all of your questions:

European customers:	US customers:
GMT +1: from 8 AM to 4 PM	GMT -5: 8 AM to 5 PM
Tel: +32 56 77 70 88	Tel +1 412 367 5185
Fax: +32 56 77 52 13	Fax +1 412 774 1970
info@eliet.eu	info@elietusa.com
www.elietmachines.com	www.elietusa.com

4. Table of Contents

1. Introduction 3
1.1. Carefully read this user manual 3
1.2. Identification data - ELIET Turfaway600 3
2. Warranty 3
2.1. Machine registration 3
3. Welcome 4
4. Table of Contents 5
5. Safety symbols 7
5.1. For your information 7
5.2. Caution 7
5.3. Warning 7
6. Main machine parts 8
6.1. Overall view 9
6.2. Engines 12
7. Safety instructions 14
7.1. Safety messages 14
7.2. Safety features 17
7.3. Safety instructions 19
7.3.1. General safety instructions 19
7.3.2. Careful and proper use 20
7.3.3. Responsibilities of the operator 21
7.3.4. Personal Protective Equipment (PPE) 21
7.3.5. Danger zone 22
7.3.6. Periodic maintenance 24
8. Dealer's responsibilities 25
8.1. Unpacking the machine 25
8.2. Other responsibilities 27
9. Operating instructions 29
9.1. Preliminary checks 29
9.2. Preparing the machine 30
9.2.1. Determining the work depth 30
9.2.2. Setting the work depth 31
9.2.3. Setting the angle of approach 32
9.2.4. Installing additional front weight 35
9.2.5. Adjusting Cruise Control 36
9.3. Refuelling 38
9.4. Preparing the work site 39
9.5. Starting and stopping the engine 39
9.6. Driving the machine 40
9.7. Working with the machine 43
9.8. After finishing the work 48
9.8.1. Cleaning the machine 48

9.9. Lifting the machine 49
9.10. Tightening the tracks 50
9.11. Fault diagnosis 53
9.11.1. The engine fails to start after idle periods. 53
9.11.2. Engine stalls during operation 54
9.11.3. The blade is not moving or is irregular 55
9.11.4. The machine will not drive or is driving irregularly 56
9.11.5. The blade does not switch off 57
10. Transporting the machine 58
11. Maintenance 60
11.1. General 60
11.2. Periodic maintenance schedule 61
11.3. Lubricants 62
11.4. Routine check after each operation 62
11.4.1. Cleaning the machine 62
11.4.2. Visual check of the state of the machine 62
11.4.3. Checking and topping up the engine's oil level 64
11.4.4. Cleaning the air filter 65
11.5. Maintenance after every 25 hours of operation 66
11.5.1. General lubrication treatment 66
11.5.2. Changing the oil 70
11.5.3. Checking and adjusting the belt tension 71
11.5.4. Checking and sharpening blade 72
11.6. Maintenance after every 200 hours of operation 75
11.6.1. Change the air filter 75
11.6.2. Check and/or change the spark plug 75
11.7. Maintenance after every 400 hours of operation 76
11.7.1. Replacing the hydraulic oil 76
11.7.2. Replacing the hydraulic oil filter 77
11.7.3. Replacing the blade 79
11.7.4. Replacing belts 80
12. Storing the machine 81
13. Equipment specifications 83
14. CE Declaration of Conformity 84
15. Hazards 85
16. Warranty conditions 86

5. Safety symbols

ELIET cannot anticipate every situation in which a risk or danger can occur. As such, the warnings in this operating manual and the labels on the machine are not comprehensive. Although minimal, some risk will always remain. If you apply a working method, operation or technique as the operator of the machine that is not explicitly recommended by ELIET, ensure in any case that this will not present a danger for third parties.







This manual uses certain symbols ("For your information", "Caution", "Warning") to provide additional information and highlight dangers.

5.1. For your information



For your information: This symbol is used to draw your attention to specific information and/or actions, or it is used to indicate where you can find additional information relating to the topic.

5.2. Caution



Caution: This symbol suggests safe practices. The purpose is to prevent incorrect operation that could result in personal injury or damage to the machine.

5.3. Warning



Warning: This notice warns you of any extreme dangers which you need to take into account in these specific circumstances. So for the sake of your own safety, remain alert at all times.

These safety messages can only warn of dangers, but not prevent them. Using common sense and observing the guidelines contained in this manual are essential to prevent accidents.

6. Main machine parts



To fully understand the content of this operating manual, you need to be familiar with the terminology used for the descriptions. This chapter refers to a broad range of machine parts and identifies their names. We recommend that you take the time to study the machine prior to use for a better understanding of the descriptions provided in this operating manual.

6.1. Overall view

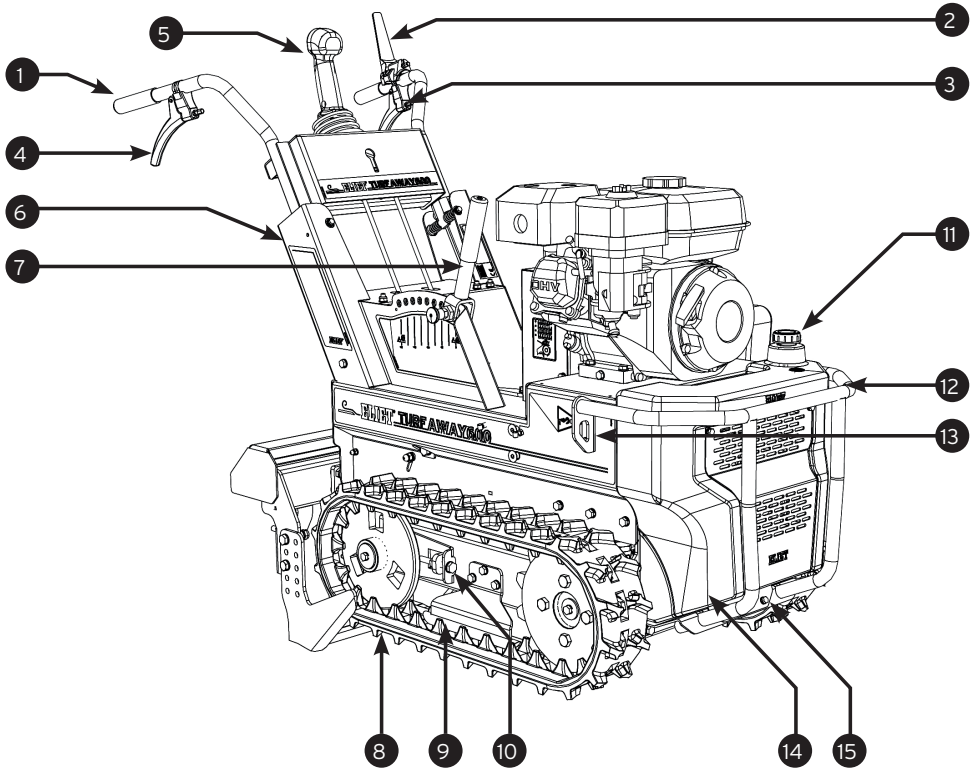

1. Handlebars
2. Operating lever blade disconnection
3. Operating lever track drive
4. Operating lever work depth-lock
5. Joystick
6. Vibration absorption
7. Lever work depth-setting
8. Track
9. Track guide
10. Track tension setting
11. Filling opening hydraulic tank
12. Bumper
13. Fixing points
14. Hydraulic tank
15. Hydraulic tank plug

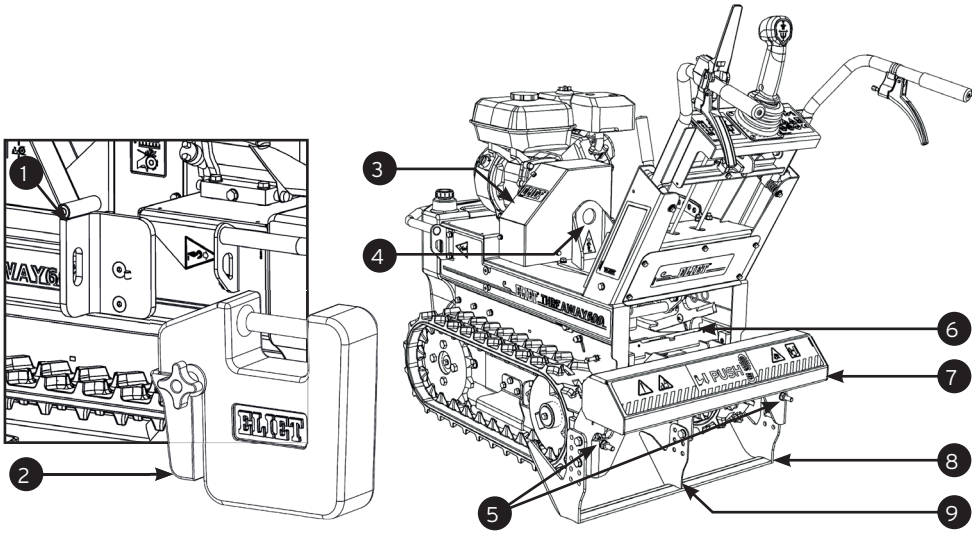

1. Fixing support front weight (optional)
2. Front weight (20 kg - 44 lbs)
3. Belt drive guard
4. Lifting hook
5. Adjustment angle setting blade
6. Blade locking mechanism
7. Footrest work depth-lock
8. Blade
9. Middle blade
10. Hydraulic filter
11. Hydrostatic pump
12. Hydrostatic drive belt
13. Drive belts for the blade
14. Hydrostatic tensioning roller
15. Tensioning roller blade drive

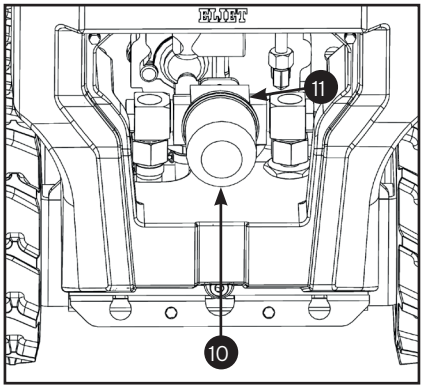

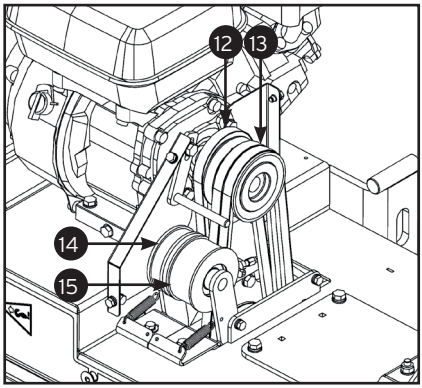

1. Blade guide
2. Blade carriage
3. Connecting rod
4. Gear box

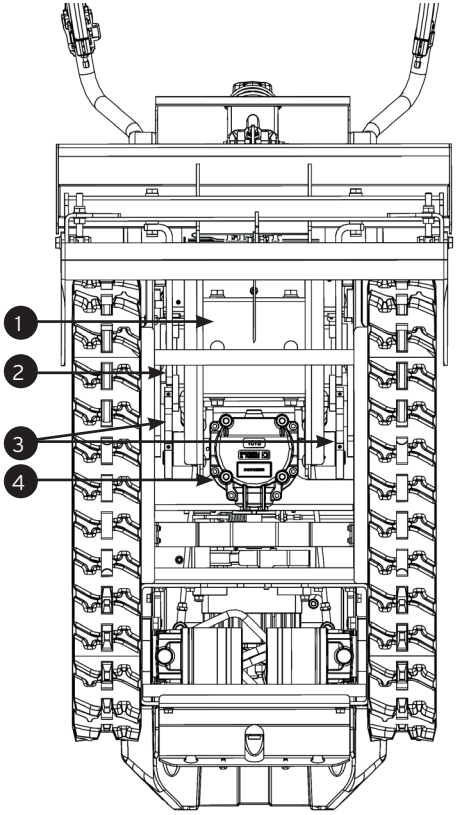

6.2. Engines

6.5 hp HONDA GX200

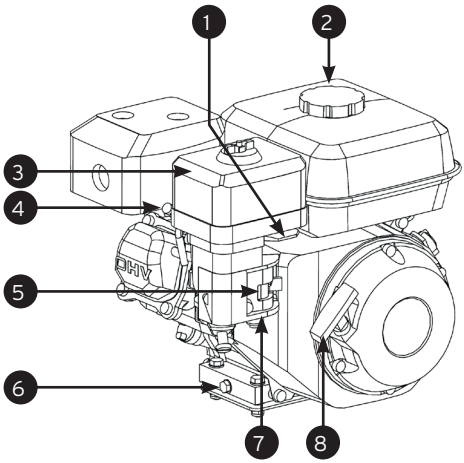

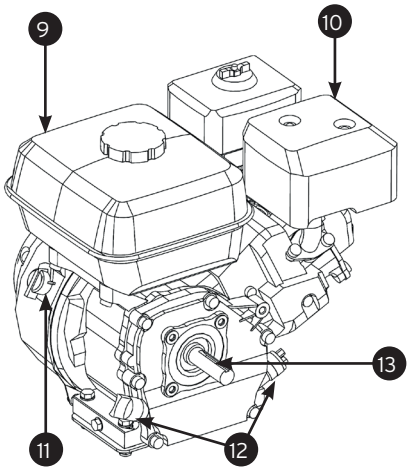

1. Throttle
2. Petrol UK (gas in USA) cap
3. Air filter
4. Spark plug
5. Choke
6. Oil drain plug
7. Fuel valve
8. Starter lever
9. Petrol UK (gas in USA) tank
10. Exhaust
11. On-off switch
12. Oil dipstick and oil filler cap
13. Crankshaft



For your information: All references to front, rear/back, left and right in this manual are from the viewpoint of the operator behind the steering column in the operating position.

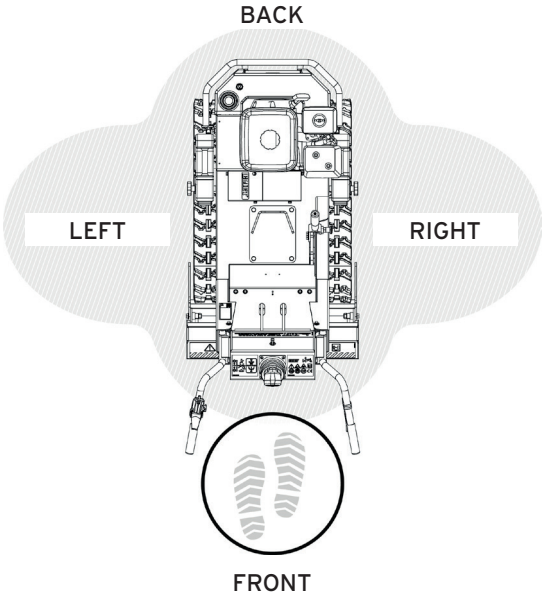



For your information: Your ELIET dealer remains at your service for any maintenance or advice, so that your ELIET machine is always in perfect condition. You can contact your local dealer for original ELIET replacement parts and lubricants at any time. These machine parts are manufactured according to the same strict rules and craftsmanship as the original equipment.



Caution: For your own safety, only original machine parts may be mounted on ELIET machines.

7. Safety instructions

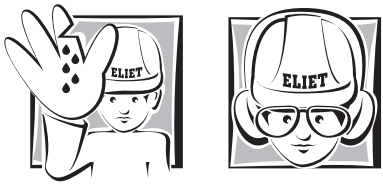

7.1. Safety messages

The safety messages are clearly indicated on the machine with stickers or relief pictograms. Please take note of the symbols and warning messages displayed.

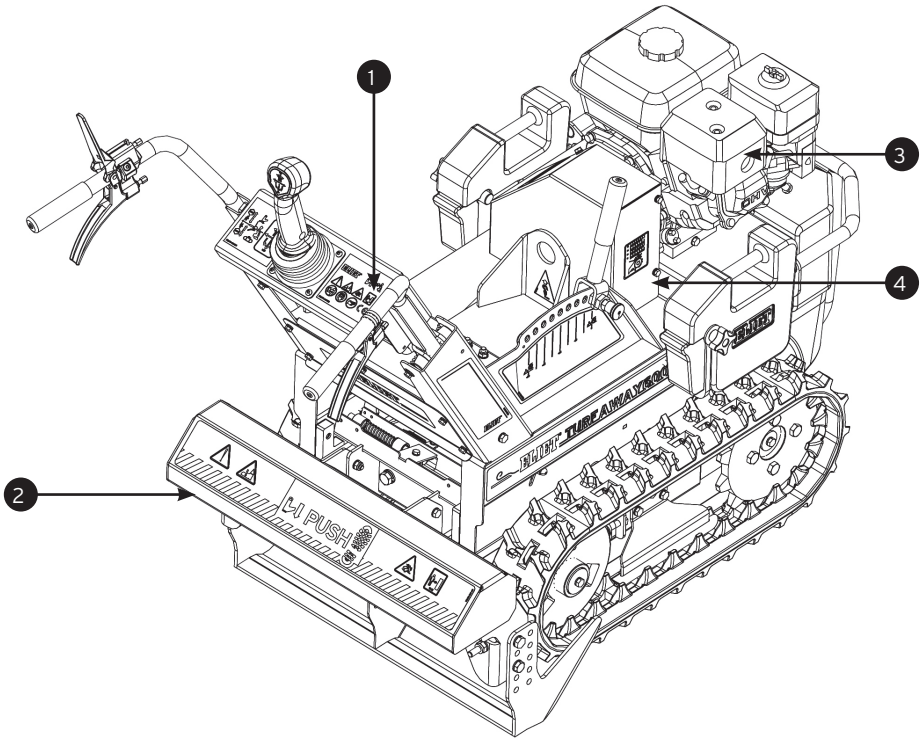

















1. This sticker can be found on the dashboard: Its aim is to draw attention to the number of risks connected with operating the machine
The risks are then displayed as pictograms:

- This pictogram shows an acute risk of injury to the feet and lower limbs. It is important to take the necessary precautions to prevent this. Always wear sturdy footwear, preferably with steel caps and clothes that cover the lower limbs.
- This pictogram shows a risk of projection. Elements can be projected from the ground due to the moving blade. Such projections can cause sensory injury. It is therefore important to wear the necessary personal protection equipment and keep bystanders at a distance.
- This pictogram is also displayed on the dashboard. It reminds operators of their responsibility to keep bystanders at a safe distance (10 m - 30ft) from the machine. Three "Do not" pictograms are also displayed on the dashboard:
- This pictogram commands the user to read the manual before using the machine.
- This pictogram orders commands the user to wear safety goggles and ear protection.
- This pictogram commands the user to wear gloves.

This sticker will be replaced in the event of damage. Order code: BQ 501 410 080









2. The blade cover is also an operating element to take the blade to its work depth. The contrasting markings on this panel are there to warn the user that it is a danger zone. The stated pictograms indicated the specific dangers:

- There is a moving blade under this cover. This pictogram warns of the risk of foot injuries.
- There is a also a risk of projectiles from the moving blade. This pictogram warns of this risk.
- Given the dangers it is advised to keep bystanders at a safe distance. This pictogram helps the user to remember not to let bystanders within a radius of 10 m (30ft) around the machine.

This sticker will be replaced in the event of damage. Order code: BQ 501 410 110

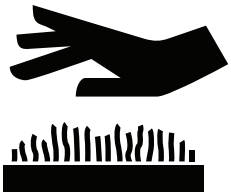

3. There is a relief image on the exhaust guard indicating that this surface can get hot. Particularly during and after operation/driving the machine there is a risk of burns.



4. A pictogram is attached to the guard on the drive belts warning of the dangers of these belts. When removing a belt guard there is a risk of getting your hands crushed in the engine. It is therefore forbidden to work without the guard.
This sticker will be replaced in the event of damage. Order code: BQ 505 010 130



Caution: If due to cleaning or use, safety stickers or parts displaying safety information have been damaged, removed or become illegible, they must be replaced immediately. Stickers and parts can be obtained from your official ELIET dealer.

7.2. Safety features

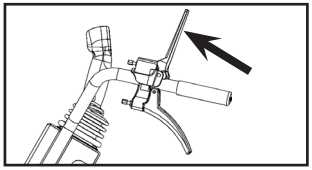

Disconnection lever blade drive: This lever must be consciously pressed in order to activate the blade. The operator is therefore alert at the moment the blade begins to move. In this way he can prepare for the risk and avoid contact with the moving blade. By letting the lever go the blade comes to a standstill within a few seconds.

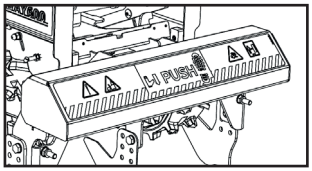

Blade guard: A guard is fitted above the blade and shields the contour of the blade's range of movement at the top. This prevents any contact with the blade holder as it moves backwards and forwards. The back-yellow markings draw attention to this risk zone.

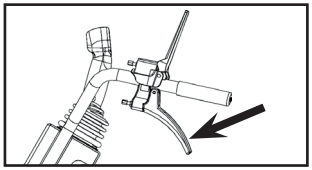

Disconnection lever wheel traction: In order to be able to drive the machine it is always necessary to activate the drive to the hydrostatic pump. By focusing on this action you become prepared for the fact the machine can start to move. When you let go of this lever the machine will also stop immediately.

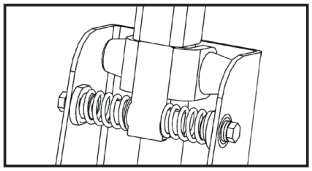

Vibration absorption on the steering control: Vibration absorption is fitted to the handlebars to filter most of the shocks and other vibrations on the machine. In this way the impact of vibrations on joints and the nervous system is limited.

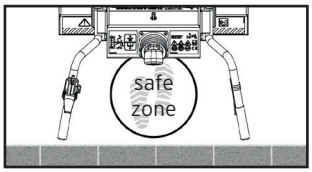

Geometry of steering control: When reversing the geometry of the handlebars reduces the risk of the operator becoming crushed between handlebars and an obstacle. In addition, the location of the joystick ensures that in this situation the operator's intuition and reflex will be to steer the machine in the other direction.

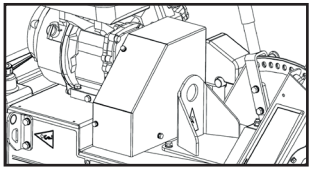

Belt guard: The drive belts are concealed behind a guard. This prevents contact with the moving machine parts in this drive, protecting from the risks associated with this drive. It is forbidden to activate the engine if this guard is not correctly installed.



Warning: Never attempt to bypass or disable the safety features. The safety measures were designed for your safety. Before using the machine, the operator should check that the safety features work properly. Any defects must be repaired prior to using the machine.

7.3. Safety instructions



Warning: Contact with the blade during operation of this machine can cause amputation of the hands or feet. The device can also cause objects to be knocked over or projected towards the operator and bystanders. Therefore, pay attention and be very careful during its operation. Negligence in respecting the safety rules can result in serious injury or death.

7.3.1. General safety instructions



Warning: Most accidents are caused by carelessness or reckless behaviour.

- The owner of the machine must keep this manual during its complete service life. It serves as a reference guide for the user so that he or she can use and maintain the machine in accordance with the correct instructions. Always refer to this instruction manual if you have any doubts regarding an action that you are about to perform.
- If the instructions stated in this manual are not clear to you, do not hesitate to contact your ELIET dealer for further explanation. In addition, the ELIET help desk is at your service during office hours to answer any questions you may have (EU +32 56 77 70 88 or USA +1 412 367 5185).



For your information: Please also read the engine manual supplied with the machine. It contains useful tips about proper use and maintenance of the engine.

- Also read the chapter which is intended for the dealer (read § 8; page 25) and verify whether the machine has been supplied in accordance with the instructions.
- Carefully observe all safety instructions when using this ELIET machine. Make sure to read all the instructions about how to operate the machine. All these instructions are for your own safety.
- Get advice from the dealer or another professional when purchasing the machine before using the machine yourself.
- Read and observe all safety messages indicated on the machine in the form of text or pictograms. (read § 7.1; page 14)
- Always observe the applicable regulations of the Labour Inspectorate to avoid accidents.
- Under no conditions whatsoever may the original design of the machine be modified without written consent of ELIET EUROPE NV (Belgium).

7.3.2. Careful and proper use

- Think about every action you perform with the machine. Do not be tempted to become inattentive. Never act impulsively or on reflex.
- Despite the extensive safety features, do not seek out hazardous situations.
- This machine is used to cut turf from an ornamental lawn. This assumes that the lawn has been laid out and the top layer of the surface contains no obstacles. The maximum work depth is 60 mm (2 1/3") in the ground. The machine must only be used for this purpose.
- Turfs shall only be cut in a forward travelling direction.
- The machine must never be used as a means of transport for people or heavy loads. Nor must it be used to pull or drag objects.
- The machine must only be used on moist lawn ground. A dehydrated lawn ground must be sprinkled beforehand.
- The machine must not be used on frozen ground.
- The machine is intended for outdoor use. It must not be used in a closed or poorly ventilated area. There is a risk of intoxication due to exhaust fumes.
- The machine must not be used on slopes of more than: 30% in the travelling direction, 30% diagonal to the travelling direction.
- When cutting the turf loose, a blade cuts through the upper surfaces of the lawn. Before starting work, the lawn must be thoroughly inspected for foreign objects and obstacles (sprinkler nozzles, pit covers, edging and stepping stones, pegs, rocks, etc.). These must be removed. Consult the owner of the terrain about objects that may be in the ground (electric cables, fuel or gas pipes, control cables, zone marking for robot mower, rocks, water pipes, irrigation systems, drainpipes, foundations, war ammunition, tree roots, etc.). These zones should be clearly marked and protected to prevent them from being accessed during the work.



For your information: ELIET declines all liability for damage resulting from improper blade settings or damage to underground objects.

- All animals must be removed from the work zone.
- All ropes and straps used to attach the machine during transport must be completely removed before driving or operating the machine.
- Never work when light intensity is below 500 Lux.
- As soon as the machine leaves the lawn the blade must be raised from the soil and deactivated.
- During transport the blade must also be switched off.
- Use the machine in a manner that respects environmental regulations:
  - Avoid running the machine without actively using it.
  - Avoid spilling petrol UK (gas in USA) while refuelling.
  - Service the engine regularly in order to maintain optimum combustion.

7.3.3. Responsibilities of the operator

- All persons using the machine are assumed to be familiar with the safety instructions. **They are fully liable for the use of the machine with regard to themselves and third parties.**
- The operator of this machine is assumed to be mature enough and with enough common sense to make decisions by him or herself.
- The operator must only use the machine when it is in good condition. He must also ensure that the operating elements have not been intentionally deactivated or fixed in one position.
- The operator may only use the machine if he knows all the risks and is able to protect himself and bystanders from such risks.
- The operator may only use the machine after reading the operating manual and correctly understanding and applying the instructions.
- The machine must not be operated by minors. However, this does not apply to people over the age of 16 who are learning to operate the machine under the supervision of an experienced user. This manual must be read before use.
- Children (under 16 years of age) and animals should be kept at a safe distance (10 m - 30ft) from the machine. Never allow third parties to come within a 10 m (30ft) radius of the machine.
- ELIET advises against lending the machine to others. Should this nonetheless be the case, the machine should be lent only to persons who are familiar with it. **Always make sure that the user is aware of the potential hazards and ensure that he/she reads the manual before using the machine.**
- When transferring operation to another user the transferring operator must ensure that he is wearing the appropriate clothing and equipped with the necessary personal protective equipment. He must check that the operator is familiar with the usage instructions. He must advise him until he becomes familiar with operating the machine.
- This machine must only be operated by persons who are not tired and in a good physical condition. Take a rest if you become tired whilst operating the machine.
- The machine must not be operated by those who are tired or under the influence of medicine, alcohol, drugs or other products affecting the mind.
- Do not leave the machine unattended while in use. Always shut off the engine when leaving the machine unattended.



Warning: A moment of inattentiveness or carelessness can lead to lifelong regret.

7.3.4. Personal Protective Equipment (PPE)



For your information: Personal protective equipment helps to reduce the risks the operator is exposed to.

- The person operating this machine must wear suitable clothing. This means clothing covering the entire body, which is not loose and which properly covers the body, protective gloves and closed footwear.
- Since your feet run the highest risk when operating the machine, sturdy, closed shoes with non-

slip soles and a steel cap are a must.
- Gloves must be worn to protect the hands.
- To protect eyesight and hearing, ELIET recommends hearing protection and safety goggles.
- Operators with long hair must keep this together with a cap or headband.
- If the sun is blinding the user must wear sunglasses or a cap to maintain a clear view.

7.3.5. Danger zone

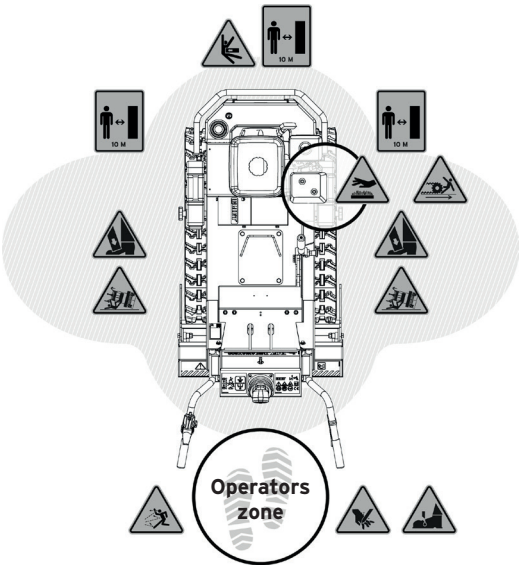

- The operators zone is situated behind machine with both hands on the handlebar. This is where there is best access to the operating elements giving control over the machine.



Warning: The blade is found at foot level. From the operating zone it is possible for the foot to come into contact with the moving blade. Therefore, take great care when activating the blade, and lower it into the ground as soon as possible, where the turf will act as protection.



Caution: Never allow the blade to move unnecessarily when above the ground. As the operator you increase the risk of coming into contact with the moving blade.



For your information: Always wear sturdy footwear to protect the feet in the event of contact with the moving blade.



Warning: It is forbidden to wear open shoes or sandals when working with this machine.

- Never allow bystanders within the danger zone - a circle of 10 m (30ft) around the machine - while working.
- Also, when driving the machine, never allow people within a 10 m (30ft) radius. The machine can quickly change direction, taking bystanders by surprise. A bystander can get crushed between the machine and an obstacle and can end up with their feet under the tracks.
- Do not take risks! Stop the blade drive as soon as someone enters the danger zone.
- The machine is intended for outdoor use. It must not be used in a closed or poorly ventilated area. There is a risk of intoxication due to exhaust fumes.
- Shut off the engine when leaving the machine unattended.
- Once the engine is running, the operator's full attention must be on operating the machine.
- Protective covers are intended to shield off dangerous areas to avoid accidents. It is therefore strictly prohibited to operate the machine or to activate the engine or any drive when protective covers are removed.
- Even when the engine is switched off after work, the exhaust and engine remain hot for about ten minutes. Contact can cause burns. Therefore, never allow bystanders near the engine.
- Do not park the machine on a steep slope. Despite the tracks, the machine can still start to move due to gravity. This can cause damage or injury.
- Never remove nor deactivate safety protection.



Caution: Since wearing hearing protection can impair the ability to hear warning sounds (such as yelling, signal tones, etc.), increased alertness is required under these circumstances. ELIET advises against using a GSM, smartphone or a portable MP3 player while operating the machine.



Caution: Repair, maintenance and cleaning work must only be carried out with the engine turned off and the spark plug cap decoupled.



Caution: In some regions a machine with a combustion engine may not be used on unimproved unwooded, woody or grassy land unless the exhaust is fitted with a spark catcher. Check the local regulations before using the machine.

7.3.6. Periodic maintenance



For your information: For your own safety and in the interest of preserving the life of the machine, this machine should undergo regular maintenance.



Caution: Wear the appropriate protective clothing and equipment when carrying out maintenance

- Before use, always inspect the machine to check that all machines parts are in good condition. The engine revolution rate must be set correctly.
- The machine must be cleaned after every work session.
- After every work session, carry out an inspection to check that there has been no damage to the blade or blade drive. Damage to these components can cause serious injury to the operator or bystanders, as well as damage to property.
- Periodic maintenance is essential. Strictly follow the maintenance schedule included in this operating manual (read § 11.2; page 61) . An hour counter helps you keep track of the hours of operation of the machine. This can be ordered as an option. (order number: BE 412 430 000)
- If parts require replacement due to wear or failure, always contact your ELIET dealer and request original ELIET replacement parts. This is important for your own safety (find an official ELIET dealer near you at **www.eliet.eu**)
- Take the machine for an annual general service to your authorised ELIET service centre.
- Maintenance work also requires full attention. All elements that can cause distraction should be avoided:
  - Avoid bystanders in the work place
  - Do not wear headphones with music or radio
  - Avoid TV screens with a moving image
  - Switch off smartphones to avoid being distracted by messages or calls.



Caution: repair, maintenance and cleaning work must only be carried out with the engine turned off and the spark plug cap decoupled.

8. Dealer's responsibilities

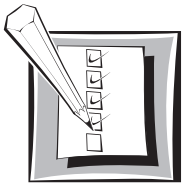

8.1. Unpacking the machine

- ELIET machines are packaged in accordance with standard rules for proper transportation.



For your information: deliveries are always ex works. Consequently, ELIET cannot be held liable for any damage that occurs during transport.

- If the packaging is damaged upon receipt of the goods, check the state of the machine to ensure it is not damaged. Report any irregularities on the delivery slip before signing for receipt.
- In the event of damage to the machine, a complaint to the shipping company must be submitted immediately after delivery.
- Before opening the packaging, check that the information on the label affixed to the box corresponds to what is stated on the delivery slip and to what was ordered.
- In the event of discrepancy, contact the ELIET representative immediately to report this.
- After checking the packaging, the machine should be unpacked.
- The machine is attached to a wooden pallet. It is enclosed with a carton sleeve to protect the contours of the machine. An opening is provided on each long side so that operators in the logistics process can assess the content and weight distribution before lifting and moving the package. The carton sleeve is wrapped with transparent film to protect the machine.
- Start by removing the transparent film. Via the openings in the sides it is already possible to conduct a visual check of the state of the machine.
- In order to easily remove the carton sleeve, cut the box on each side just above the pallet. (see illustration)
- Remove the sleeve sideways at an angle, to reveal the machine.

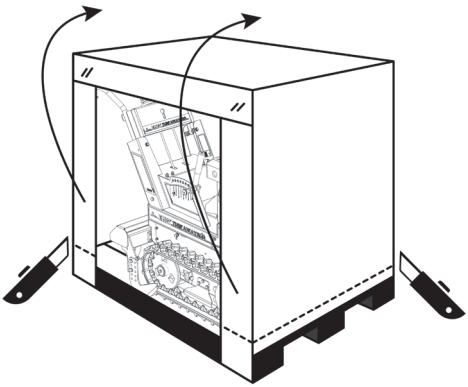

- The box contains the following elements:
  - Machine
  - Manual
- The machine is fully assembled in the packaging. The blade is locked down at a height where this rests on the pallet. First release the blade by pulling in the lever to disconnect the blade depth. The blade carrier will automatically spring out.
- The disconnection lever for the blade drive and track drive have been pulled together for transport with a plastic strap. Cut this strap so that the two levers return to the neutral position.
- The machine features a central lifting point. Fix a hoist into this hoisting eyelet to allow it to be moved from the pallet. (read § 9.9; page 49)

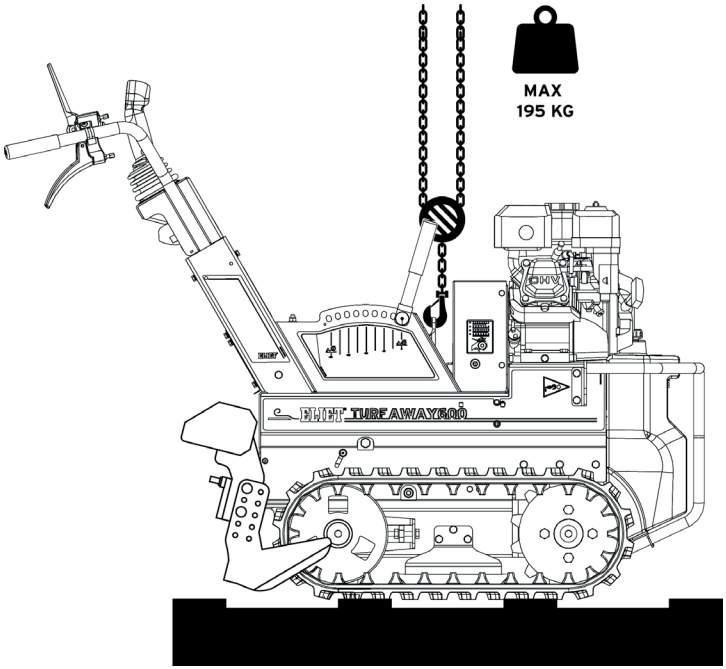



Caution: the basic weight of the machine (without the extra front weight option) is **195 kg (430 lbs)**. Make sure that the hoist is appropriate for lifting this weight. You must only use hoisting elements (chains, cables, hoisting belts, etc.) that have been recently certified.

8.2. Other responsibilities

- The dealer is responsible for preparing the machine for use, before supplying it to the end user.
- The fuel tank must be filled with petrol UK (gas in USA) (read § 9.3; page 38)
- The dealer checks whether there is oil in the engine and tops this up if necessary. (read § 11.4.3; page 64)
- The dealer checks whether the machine is filled up with hydraulic oil. (read § 11.7.1; page 76)
- Every ELIET dealer warrants the long life span of ELIET machines. He will fully lubricate the machine. All hinging and rubbing surfaces will be greased. In particular the guide on the blade carriage will be lubricated. (read § 11.5.1; page 66)



For your information: check the list for the correct lubricant (read § 11.3; page 62)

- The dealer ensures that the engine speed is set to 3,200 rpm.
- The dealer must make a final test drive and check that all devices are working properly.
- The dealer must check that all safety features work perfectly.
- The dealer must set the Cruise Control of the joystick operation. (read § 9.2.5; page 36)
- The dealer shall install any additional options on the machine.



Warning: As an ELIET dealer you must familiarize your customers with the **operation of the machine and also point out the possible dangers** while using it. You are expected to carefully go over the maintenance points of the machine together with the new owner. Repeat these instructions until the new owner has fully understood everything.

Important information for the new owner at the time of delivery:

- The dealer explains how to adjust the depth and what the optimum work depth is.
- The dealer must familiarise the new owner with the machine's operation.
- The dealer gives practical tips on working efficiently with the machine.
- They must also inform the new owner of potential hazards.
- The dealer will draw attention to the fact that steering the machine in reverse is opposite to when driving forwards. This takes some practice before you are used to it. With this we wish to prevent danger occurring due to ignorance.
- The dealer will draw the new owner's attention to the fact that he should check the tension of all bolts after the first 5 hours of operation.
- The dealer must insist that the machine should be returned for its first service after 10 hours of operation (drive belt tightening and first oil change are required).



Caution: The dealer must point out that the new owner should register their machine at **www.eliet.eu** to maintain their right to the warranty. The dealer must ensure that the warranty card is filled out and signed. This is to avoid any warranty disputes. Please read the warranty conditions for more details.

9. Operating instructions

9.1. Preliminary checks



Caution: Before commencing work, it is recommended to get into the habit of checking the following points:

Checklist

- Check the total number of hours the machine has operated and compare this to the maintenance table. Perform maintenance as necessary. (read § 11.2; page 61)
- Check the oil level. Pull out the dipstick and check whether the oil level is below minimum (read § 11.4.3; page 64)
- Check in advance that the fuel tank is full. If not, fill it up (read § 9.3; page 38)
- Check the air filter for excessive dirt. Clean it if necessary. (read § 11.4.4; page 65)
- Check whether the blade is clean and there is no mud stuck on. The horizontal blade and the three vertical blades must be cleaned beforehand.
- Check the blades for wear and tear. Sharpen the blade or replace as necessary. (read § 11.5.4; page 72)
- Check that the blade has not been distorted or broken. Straighten or repair the blades, or replace them if necessary. (read § 11.7.3; page 79)
- Check that the belt tension is adequate. If not, it can be adjusted. (read § 11.5.3; page 71)
- Check whether the depth has been set correctly. (read § 9.2.1; page 30)
- Check that all protection covers are present and properly in place.
- Check that all safety features on the machine are still operating properly. (read § 7.2; page 17)
- Check whether the engine operates at the given rotational speed (3,200 RPM) Never attempt to change the default engine settings. Install the optional hour counter, this has a built-in revolution counter making this easy to check.
  (art. code: BE 412 410 001)

Once these points have been checked and approved, the work area can be prepared (read § 9.4; page 39) and the machine can be moved onto it.

9.2. Preparing the machine

9.2.1. Determining the work depth



Caution: the work depth must not be adjusted when the engine is running. Always switch off the engine before doing this.



Caution: Always wear protective gloves when setting the working depth.

The work depth depends on the intended goal and the state of the lawn.

The aim should be to cut the turf as thin as possible for various reasons:

1. The thinner the turf, the less the resistance on the machine.
2. The thinner the turf, the less material is removed from the terrain.
3. The thinner the turf, the less physical work involved in removing the turf.

- The right work depth should be chosen to suit the proper functioning on the machine.
- For the proper functioning of the turf cutter it is important to cut just below the root structure of the lawn vegetation.



Caution: lawn growth can accumulate on old thatch layers and dried root structures. This spongy layer can reach several cm (inches). It is necessary to cut below this layer.

- To set the correct depth, start by making a cross section of the top layer in the ground. Stick a spade vertically in the ground and remove a piece of lawn to depth of +/- 10 cm (+/- 4").

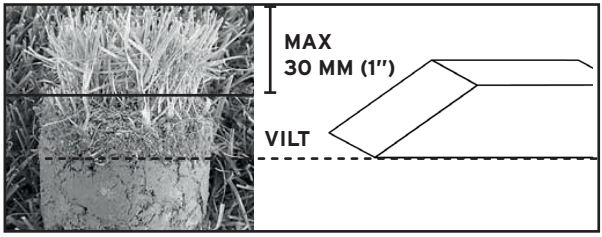

- Based on the layers in this cross section it is possible to assess how deep a cut is required.
- Also, take the supporting weight of the lawn into account. The machine will be supported by its wide track system by the grass stems above the ground. This will determine the effective depth of the blade in the ground.

9.2.2. Setting the work depth

a. Adjustable scale

To set the distance whereby the blade drops below the contact surface of the tracks, there is a gradual scale setting on the side of the machine.

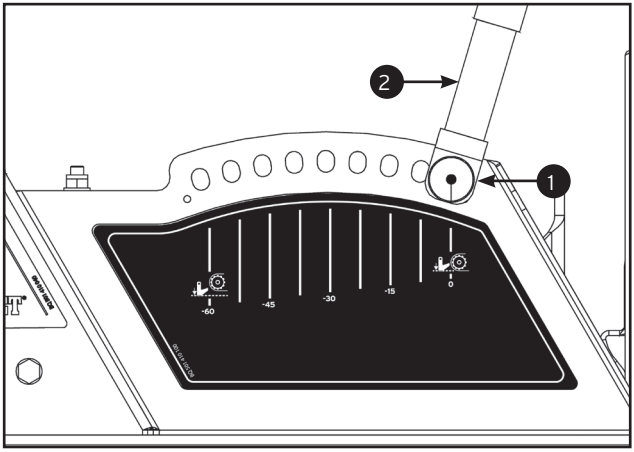

- 8 positions can be selected, giving the blade **15 mm (1/2")** of extra depth between two consecutive positions. In this way you can use this setting to allow the blade to drop a maximum of 60 mm (2 1/3") below the track level.
- Before selecting the blade depth, you must first raise the blade to its highest (floating) position. To do so, squeeze the operating lever to release the blade. This is found on the right handle of the handlebars. When released, a locked blade will automatically spring upwards.
- Now, pull the bolt **(1)** on the lever **(2)** for the depth-setting backwards and move the lever to the position on the scale which is closest to the desired cutting depth. To keep the lever in this position, release the bolt again, allowing it to settle in the hole in the scale.

b. Fixing positions on the blade

Each blade has holes which allow it to be fixed in different positions. If the desired depth cannot be achieved with the maximum setting options on the scale **(see a)**, the blade can be fixed in another position.



For your information: the scale from **"a"** (so also the maximum work depth of 60 mm (2 1/3") is aligned with the blade fixed in the uppermost position.

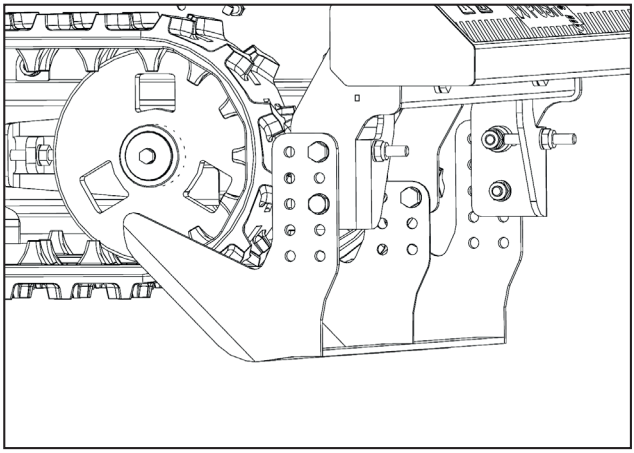

- The blade is attached to the blade holder in three places. The two side blades are attached with two M10 bolts and the central blade with a single M10 bolt.
- Completely unscrew all the bolts (anti-clockwise). To do so use a ratchet and a size 17 ring wrench.
- Now, place the blade in the desired position. Make sure to align the chosen position on each side.
- Replace the five M10 fixing bolts in their original position.
- Firmly re-tighten the bolts.

After adjusting the work depth, correct the angle setting of the blade as necessary. (read hereafter)



Caution: when mounting the blade in a lower position, take into account that the free ground in the raised floating position will be smaller. This means you must take care when driving or (un)loading the machine that the blade does not get stuck in the ground.

9.2.3. Setting the angle of approach



Caution: the angle of approach of the blade must not be adjusted when the engine is running. Always switch off the engine before doing this.



Caution: the blade can cut sharply. Prevent cuts to the hands and always wear gloves when you do this.

The angle of approach of the blade can be adjusted to suit the type of ground and grass and how hard the ground is. The greater the angle **(α)**, the easier the blade will penetrate the ground. On the other hand, it will offer more resistance when cutting and will push the turf upwards.
A smaller angle of approach of the blade causes less resistance when cutting, and can be used when working with heavy soil. This also prevents breakage when cutting thin turf. A small angle of approach is used in the case of finer, short mown ornamental lawns.

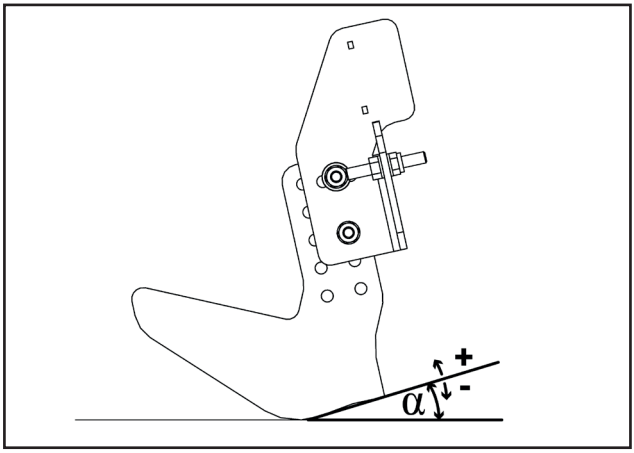

How to adjust the angle of approach.

- To adjust the angle of approach the blade must first be loosened. To do so, rotate the 5 bolts anti-clockwise until there is no tension on the bolt. (use a ratchet and size 17 ring wrench)
- The angle of approach of the blade can now be adjusted using the M10 eyebolt which connects the blade in a crosswise direction with the blade holder.
- If the aim is to increase the angle of approach it will first be necessary to loosen the nut on the back by turning it anti-clockwise **(1)** with a size 17 ratchet wrench. Then continue by tightening the M10 nut on the inside of the holder further **(2)** against the holder with a size 17 open-ended wrench. In doing so, the blade will tip further, thus increasing angle of approach. Then, block this position by firmly re-tightening the nut on the back of the holder **(3)**. Do this on each side of the machine.

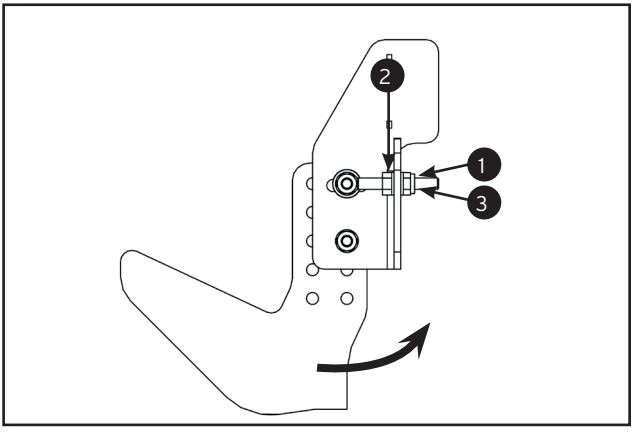

- If the aim is to reduce the angle of approach it is necessary to twist the nut on the inside of the holder in a clockwise direction **(1)** so that this comes loose from the holder. Then, turn the nut on the back of the holder with a size 17 ratchet in a clockwise direction **(2)**. This causes the blade to stand straighter, thus decreasing the angle of approach. Once the required angle is set, the nut on the inside must be firmly re-tightened, to sit tight against the holder. **(3)**.

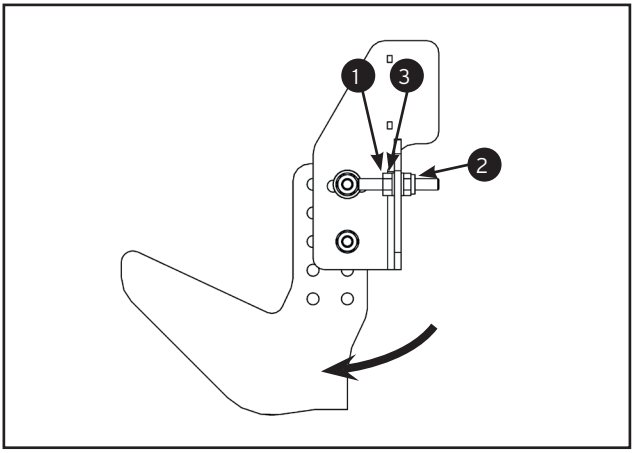

- Do the same on the other side. Make sure that the angle setting is equal on both sides.
- Once both sides are adjusted equally, the 5 fixing bolts should be firmly re-tightened (wrench size 17).

9.2.4. Installing additional front weight

When the ground is heavy or there is little moisture, the machine will find it harder to guide the blade. As a result, the dynamic of the digging knife movements will cause the front of the machine to move up and down. This movement results in an irregular cut. To avoid this effect you can choose to add an optional weight to each side at the front of the machine. A maximum of two weights each of 20 kg (44 lbs) can be suspended (order number BU 601 002 000). You can order special weight carriers for this purpose: MA 031 001 001 (per set).

Constructing the weight carrier:

- The weight carrier includes two elements: a left part and a right part.
- Fixing holes with screw thread have already been included in the machine frame.
- Place the left carrier on the left side of the machine and place the two bolts **(1)** with conical head M10 in the provided openings. Tighten the bolt by turning in a clockwise direction (use a size 6 Allen wrench) until reaching 40 Nm.

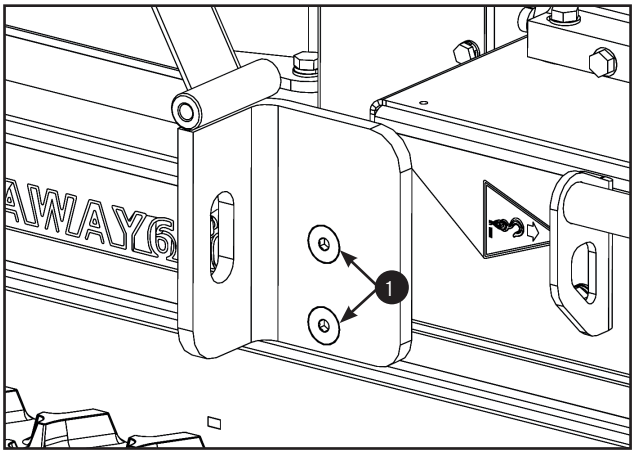

- Repeat for the right carrier.

Suspending the weight:



Caution: prevent back problems. Each weight weights 20 kg (44 lbs). They should be lifted in an ergonomic manner. Bend your knees and keep your back straight. Grasp the weight, hold it close to your body and lift by re-straightening your legs and standing up. In doing so, use the force of your leg muscles rather than your back muscles.



Caution: wear protective safety shoes for protection in case the weight falls and lands on the feet.

- Each weight carrier has a shaft that is welded to the vertical carrier element. There is a lobe knob at the end of the shaft. Unscrew this completely (anti-clockwise) from the carrier. Slide the weight laterally with its eyelet on the axis of the vertical support part. Caution: be sure to place the large part of the weight in direction of the front of the machine.

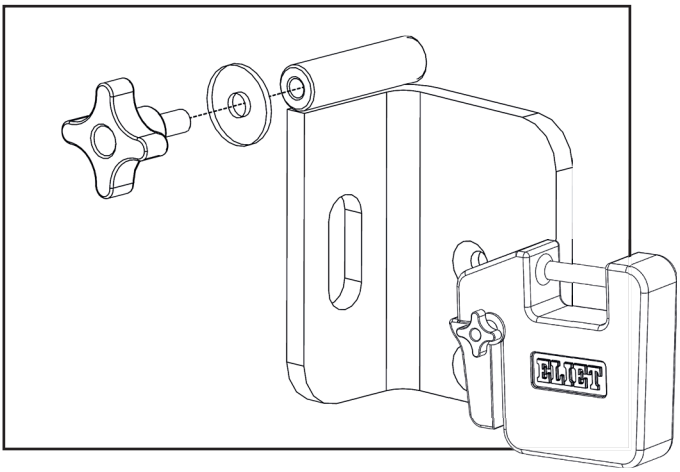

- Now allow the weight to rest on the carrier.
- Then return the bolt to the carrier shaft.
- Repeat on both sides.

9.2.5. Adjusting Cruise Control

In order to keep the driving speed constant while you are working, the machine is equipped with a kind of Cruise Control. This means that the operator is not required to hold on to the joystick lever continuously. This mechanically makes the mobility (in a forwards and backwards direction) of the joystick lever more rigid by applying resistance. This is done with two rubber brake pads which press against a friction plate on the lever.

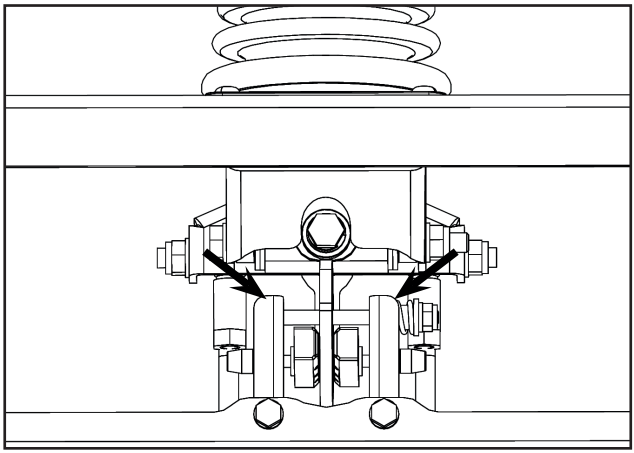

The level of operating stiffness can be adjusted by adapting the pressure of the brake pads on the friction plate.
Account must be taken of the fact that, when working, the entire set of handlebars vibrate due to the movements of the digging blade. It is therefore advised to set the Cruise Control in such a way that it does not change position due to these vibrations. This means it is not necessary to hold it all the time when working. This improves the operation of the machine.

- The following tools are required to adjust the brake pads: 1 ring wrench and 1 open-ended wrench with wrench size 10 mm (1/2").
- Each brake pad is mounted on a lever. These two levers are brought together by a bolt on which a compression spring regulates the pressure on the brake pads

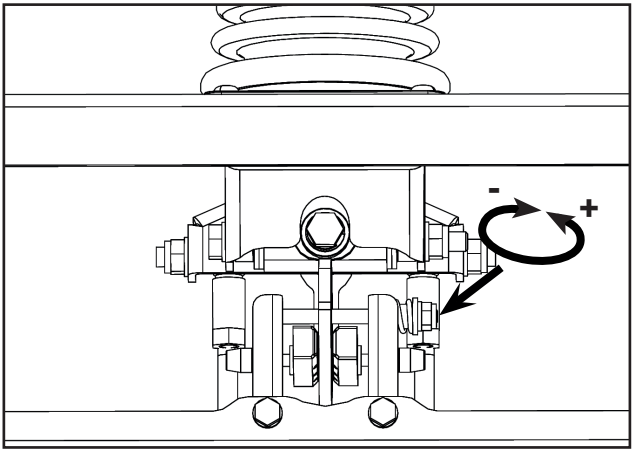

- By tightening the nut (in a clockwise direction) it is possible to increase the pressure and make the mobility of the joystick lever more rigid.
- By slightly loosening the nut (in an anti-clockwise direction) it is possible to make the joystick lever more mobile.
- If the pressure on the brake pads on the friction plate is removed entirely by making the nut so loose that the compression spring has no more force, the joystick will spring back entirely to its neutral position when you let go.



For your information: the mobility setting of the joystick can be set to suit the operator. He should set it to make it feel most comfortable during his work.

9.3. Refuelling

When petrol UK (gas in USA) in the machine is running low, it must be refuelled. The use of fresh petrol UK (gas in USA) is recommended at all times. It is best to use petrol UK (gas in USA) E5 or octane 95.



Warning: Under certain conditions, petrol UK (gas in USA) is extremely flammable and highly explosive. Fires and petrol UK (gas in USA) explosions can inflict severe burns and cause damage to personal property. As a result, please observe the following points:

- Never refuel with the engine running. Always allow the engine to cool off for several minutes prior to fuelling.
- Use fresh petrol UK (gas in USA) only. ELIET is environmentally conscious and, as such, recommends using unleaded petrol UK (gas in USA). Additives may be used for extended fuel freshness.
- Store the petrol UK (gas in USA) in an approved tank. Keep out of reach of children.
- Never refuel at the location where the machine is later to be operated Keep a distance of at least 10 m (30ft) from the selected work area. This is to avoid creating a fire hazard.
- Never refuel in a closed area.
- Clean off the area around the cap of the fuel tank and remove it. Do not fill the tank completely. Fill up to approximately 10 millimetres (1/2") from the brim. In other words, never fill it to the brim.
- Always use a funnel or a spout for refuelling. Special funnels are available from your ELIET dealer.
- Put the cap back on the tank as quickly as possible. If any petrol UK (gas in USA) is spilled while refilling, then the engine should be immediately cleaned.
- Also make sure that clothing does not come in contact with the petrol UK (gas in USA). Should this occur, the clothing must be changed immediately.
- It is irresponsible and therefore strictly prohibited to refill the tank in the vicinity of smokers or near naked flames.
- If fuel is swallowed or comes in contact with the eyes, consult a doctor immediately.



Warning: It is forbidden to smoke when refuelling.

9.4. Preparing the work site

- Never work when light intensity is below 500 Lux.
- Besides the machine, the work area must also meet certain conditions which must be verified prior to starting the work:
  - Inspect the lawn thoroughly for objects and obstacles (sprinkler nozzles, pit covers, edging and stepping stones, pegs, rocks, etc.). This must be visually marked (e.g. with a flag) to avoid a collision. Cordon off zones where invisible underground objects may be found, e.g. electric cables, fuel or gas pipes, control cables, zone marking for robot mower, rocks, water pipes, irrigation systems, drainpipes, foundations, war ammunition, tree roots, etc.
  - Ideally the turf should be mown. The grass should preferably be no longer than 30 millimetres (1''). In this way the machine will drive over a more even surface. Objects to be avoided are also more easily visible in a mowed lawn.
  - Ideally the turf will be cut after a heavy shower or shortly after a period with considerable rain. This makes the ground softer, which facilitates cutting.
  - If there is no rain it is also an option to sprinkle the lawn at length beforehand.

9.5. Starting and stopping the engine



Caution: Never start the machine when dust has settled on the engine or between its cooling fins. This reduces proper cooling of the engine and can cause a fire.



For your information: the procedure to start the engine can vary per brand. Please check your engine manual.



Caution: make sure that there are no bystanders within a 10-metre radius of the machine before starting the engine.



Caution: make sure that none of the operating levers are engaged during the engine start procedure.



Caution: avoid starting the engine in an enclosed area. If this cannot be avoided due to the machine's storage; make sure the area is well ventilated and never allow the engine the run for longer than 30 seconds in an enclosed space.



Caution: before starting the engine the correct work clothing and personal protective equipment should be worn.

- If the fuel tank is equipped with a fuel valve, open it.
- Depending on the type of engine, move the lever or turn the start switch into the ON position.
- Set the choke lever to "Close".
- Open full throttle, represented by the image of a rabbit.
- Start the engine by pulling the starter rope.
- Once the engine is running, set the choke to "Open". This prevents the engine from getting flooded. If you forget to do this, the engine will slow down and start producing a lot of smoke. It will eventually come to a stop. If this happens, restart the engine without opening the choke.
- If the engine fails to restart, this could be due to a greased spark plug, which consequently must be cleaned or replaced (read § 11.6.2; page 75)
- Check whether the engine runs at full throttle 3,200 RPM.
- To stop the engine, switch the throttle or turn the knob into the "OFF" position.
- If the machine is equipped with a fuel valve, close it.

9.6. Driving the machine

It is necessary to use the engine in order to move the machine. Only then can the hydrostatic drive be activated.



Caution: prevent bystanders from entering a zone of 10 m (30ft) around the machine when driving.



Caution: before driving the machine, first plot a course, in order to avoid any danger zones and obstacles.



For your information: in order to get used to driving the turf cutter, it is possible to reduce the driving and reaction speed by lowering the revolutions of the engine.

- Take your position behind the handlebars of the machine.
- Make sure that the blade is in its floating raised position. As a precaution, briefly squeeze the left lever (blade disconnection).

- Place the central joystick approximately in the central position.

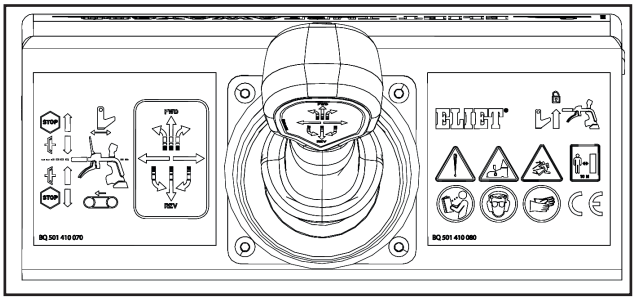

- Now squeeze the black lower lever on the right handle (operating lever track drive) in order to couple the drive. As long as you wish to move forward, hold this lever completely against the handle.



Caution: by squeezing the lower lever on the right handle, the drive is activated and the machine can start moving. If control is lost over the machine let go of this black lever immediately. The machine will then come to a standstill.

- The joystick is used to set the driving direction and speed:
  - Push forwards to make the machine drive forwards. The further it is pushed, the faster the machine will drive.
  - Push to the left to make the machine turn to the left.
  - Push to the right to make the machine turn to the right.
  - The more the joystick is pushed to the side, the more intensive and rapid the turning motion.
  - Press the joystick forwards and to the left, and the machine will make a bend the left in a forward driving direction.
  - Press the joystick forwards and to the right, and the machine will make a bend to the right in a forward driving direction.
  - Pull the joystick backwards, and the machine will go into reverse. The more the joystick is pulled towards you, the faster the machine will drive in a backwards direction.



Warning: be careful and keep in control when pulling the joystick backwards. The feet can become crushed between the blade and the floor when driving backwards. Always wear sturdy safety shoes.



Caution: when using in reverse, the joystick operates in an opposite manner compared to when operating in a forward direction. So, maintain control and focus all of your attention on driving.

- Pull the joystick backwards and to the left, and the machine will make a right bend in a backwards driving direction.
- Pull the joystick backwards and to the right, and the machine will make a left bend in a backwards driving direction.
- Those with no experience in driving the machine must first spend time becoming familiar with the machine by carrying out manoeuvres on open terrain with a hard surface, without obstacles.
- The Cruise Control can be set in such a way that the joystick remains in the position pressed. This allows the machine to continue driving at a fixed speed. However, when driving on a course where obstacles are encountered, keep the hand on the joystick, allowing immediate adjustment of the speed or driving direction.



Caution: on a course with obstacles the driving speed must always be at a moderate pace.

In the event of potentially losing control, do not hesitate to immediately drop the operating lever on the right-hand side so that the drive is switched off and the machine immediately comes to a standstill.



Caution: as soon as the machine reaches a standstill, the joystick must first be returned to the central position. This prevents the machine from speeding off the moment the operating lever for the track drive is pressed.



Caution: when driving forwards up or down a slope the blade may touch the ground in the kink in the valley. Watch out not to lose control over the drive. Always moderate your speed.



Warning: when loading the machine with the aid of loading ramps, always check that the loading ramps are firmly fixed to the vehicle. Indeed, the traction force of the tracks can make the ramp slide off, causing this to come loose from the vehicle, making the machine tip and fall.

The operator could end up under the machine, causing serious injury or death. Care and attention is required.
When riding up a slope it is necessary to pay attention when the machine reaches the kink (top) in the slope. When reaching this point with the machine, it can suddenly tip forwards or backwards. Be prepared for this in order to avoid losing control. Always slow down when approaching the top or valley of the slope.



Caution: when riding over bridges, patios or pontoons, always check that the supporting weight is strong enough to bear the weight of the machine and operator.



Caution: The engine must be running in order to move the machine. If the engine is running, there is a risk that the blades will be engaged and cause injury or damage. Do not under any circumstances touch the decoupling lever of the blade drive while driving.

9.7. Working with the machine

If the preparation as described in chapters § 9.2 and §9.4 has been followed, work may be commenced.

Attention: Only those with experience in operating machines may work with this machine.



For your information: this Turfaway is meant to cut turf with a width of 60 cm (24"). The maximum work depth is limited to 60 mm (2 1/3"). This machine should only be used for this purpose. Before you start, read the safety instructions. (read § 7; page 14)



Warning: once you begin working with the machine, further risks occur which may cause serious injury or damage. Be aware of these dangers. While operating the machine, the operator's full attention must be on the job. Operators should always protect themselves by wearing the appropriate work clothing, safety shoes and personal protective equipment. (read § 7.3; page 19)



Caution: make sure that there are no bystanders within a 10-metre radius of the machine.



Caution: the blade drive should only be activated once the machine has arrived on the lawn.

A good gardener works efficiently and according to a well defined plan. He shall define the intended route used to cut away the turf beforehand. In doing so he keeps an optimum overview of his work and discovers problems or difficult elements beforehand and can consider how to approach them. This helps to prevent accidents or incorrect use of the machine.

Tip when determining the course:
When cutting turf in the zone where it is to be removed this shall always be done in parallel strips. In particular, in the turns at the end of each track, a number of actions must be carried out: the blade is lifted from the ground, turn, the blade is returned to the ground. To achieve this faster and more easily it is handy to first cut out one to two perpendicular strips in the turning zones at the end of the tracks and to immediately remove these loosened turfs entirely.

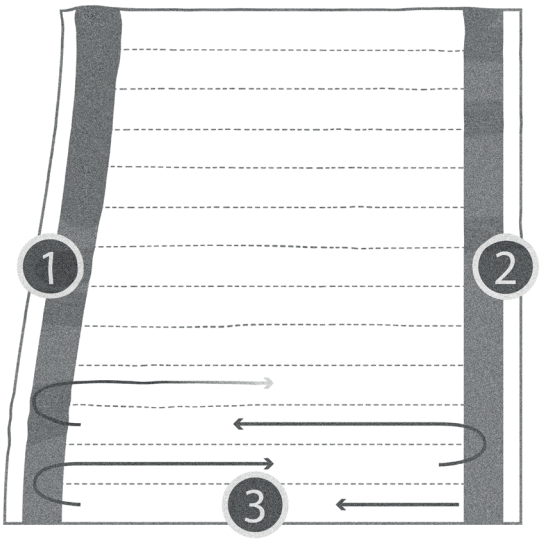

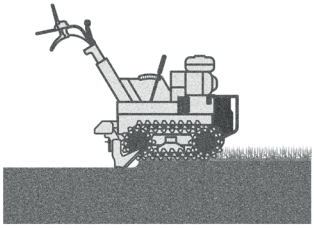

In doing so two deeper zones are created at the extremities of the work zone. After turning it will be easier to get the blade to work depth when beginning the new strip. This allows you to work faster.

Before working with the machine the following steps will be required:

- Set the correct work depth beforehand. (read § 9.2.2; page 31)
- Drive the machine to the start of the marked course.
- Set the engine to full throttle (the revolution will be 3,200 RPM).
- Put the joystick lever in its neutral position.



Caution: keep feet at a safe distance from the blade, which will start moving upon the next action.

- Activate the blade drive by pressing down the red lever at the top of the left handle. Make sure that this is pressed fully against the handle.
- Adopt a stable position and now lift the machine up with the handles so that the back of the tracks is lifted about 10 cm (4") from the ground.



Caution: when lifting, make sure that you do not also press the right handle by mistake. This would open the lock of the blade depth preventing the blade from clicking tight at work depth.

- Now use your foot to press in the middle on the blade guard to bring the blade down. Press until the blade clicks into place at the set work depth.



For your information: if, when pressing with the foot, no downwards movement occurs, it might be that the depth setting is locked in the upper position. In this case, pull briefly on the lever in front of the blade release on the right handle, while pushing downwards with the foot on the blade guard. Once everything starts moving, release the lever again.

- Now allow the machine to drop down again so that the blade that moves back and forth rests on the ground. Continue activating the blade connection.



Caution: if the blade reaches the ground, the movements of the blade will pass shocks onto the machine. So, be alert and don't allow this to catch you by surprise.

- When the moving blade rests on the ground it will try to dig into the ground under the weight of the machine.
- Now pull in the lever to activate the track drive on the bottom of the left handle. This activates the hydrostatic drive.
- Now, use your right hand to press the joystick lever slowly forwards so that the machine starts moving forwards.
- The forward movement will cause the blade to be pulled further into the ground until it reaches the work depth. You can feel this once the tracks make contact across the entire length of the ground.
- To make the blade easier to use, you can lean on the handlebar, which puts extra weight on the blade and thus makes it easier to start.



For your information: while working, we advise **not(!)** to keep holding the joystick once the driving speed has been selected. Due to the shocks there is a risk of operating the joystick by accident, affecting the speed or causing the machine to steer off course. This can be prevented by not holding onto the joystick.

Tip: when starting work on a zone it is important to stop the machine a few metres (yards) after starting (stop the track and blade drive). Allow the blade to remain at work depth. Check the cut turf to assess whether the set work depth is correct. Aim to cut away the thatch layer and the most rooted zone, however, keep the turf as thin as possible to prevent the transportation of excess earth. If necessary, adjust the depth setting. (read § 9.2.2; page 31)

- Once the blade is at work depth the speed can be gradually increased.
- The driving speed will depend on the hardness of the ground. Find a speed that allows the machine to work comfortably.



For your information: if the tracks slip this is a sign that the resistance on the machine is too great to cope with the selected speed. Start by reducing the driving speed.

If this fails to change anything, check the blade depth. The resistance on the blade can be too high for a number of reasons:

1. The blade is set too deep compared to what needs to be cut. Adjust the cutting depth.
2. The layer being cut is dry. By adjusting the cutting depth a more beneficial cutting depth can be found.
3. You are cutting in a zone of thatched roots. The sponginess of this zone makes cutting difficult. Set the blade deeper in order to cut below this zone.
4. Contamination has gathered around the blade and is preventing the blade from doing its work (long grass, root, plastic, string, net, etc.). Clean the blade.
5. The angle of approach is too large for the type of ground. Heavy ground in particular causes extra resistance. You must adjust the angle of approach. (read § 9.2.3; page 32)
6. The blade has become blunt. Sharpen the blade. (read § 11.5.4; page 72)



Caution: if, during the work, you notice an abnormal vibration or sound which continues for several metres (yards), stop the machine immediately and check that the blade, the blade holder or drive have not been damaged.

If you encounter problems getting the blade into the ground, this may be caused by a number of reasons:

1. The ground is too hard. You can sprinkle the lawn beforehand.
7. The grass is too long. Long grass stalks will be squashed by the blade creating a tough cover and potentially making it hard for the blade to cut through. It is sensible to mow the grass short (< 30 mm - 1").
2. If the angle of approach of the blade is insufficiently large, the blade will find it harder to hook into the ground. The angle of approach can be adjusted. (read § 9.2.3; page 32)
3. The blade has become blunt or has not sharp cutting edge due to earth attached. In this case the thick knife slides over the ground and cannot begin. Clean or sharpen the blade. (read § 11.5.4; page 72)

- If you notice a significant drop in engine speed while moving, this indicates an overload. The working speed should be reduced immediately.
- Bends can be cut with the blade at work depth, however, there are limits to the radius of this bend. Avoid making sharp bends < 100°.
- If you wish to make sharper bends, do this by cutting two perpendicular (according to the desired angle) strips. In doing so, the second strip will have a new start.
- Before removing the blade from the ground it must first be deactivated. To do this, let go of the red lever on the top of the left handle. At the same time, stop the track drive by letting go of the bottom lever on this left handle.
- Now, to raise the blade, squeeze the release lever on the right handle. This releases the depth lock and the blade holder will be raised by the 4 suspension springs.
- The weight of the turf resting on the blade will prevent this to some extent. You can be help to break open the turf by lifting up the machine at the back.



Caution: to lift the machine, use a straight back to avoid straining the back muscles. In doing so you will maximise the power from the leg and arm muscles.

- If, when cutting the turf, the aforementioned course recommendation is applied, it will not be necessary to stop at the end of the work strip. Since the blade comes out of the ground at the end of the turf by itself you will not need to unlock the blade and it will spring up automatically. After turning you can immediately cut the adjacent strip. If the machine is driven on the grass mat again, you only need to bring the blade to work depth. With practice this can be achieved in one flowing movement.
- When cutting in strips, avoid an overlap. Otherwise, a new long cut will be made in the turf already cut, causing this to fall apart. This makes it difficult to remove the turf. Use the vertical part of the blade to cut into the same slice in the adjacent strip.
- If encountering a collision with an obstacle while cutting (e.g. a tree root), immediately lift the back of the machine slightly using the handles. In doing so, leave the blade at the set depth. Also, leave the track drive on. By lifting the machine, the blade will be lifted over the obstacle. You can allow the machine to drop again a few centimetres (inches) further on, whereby the blade will return to its original depth.
- **Tip:** If you encounter an obstacle (e.g. a tree root) while working, you can assume that this obstacle is present in multiple strips. The adjacent tracks can be prepared with this obstacle in mind and to avoid the impact.

9.8. After finishing the work

9.8.1. Cleaning the machine



Caution: machine maintenance such as cleaning should only be carried out when the engine is turned off.



Caution: there are also risks involved in cleaning the machine. Wear protective clothing and also protect the senses by wearing personal protective equipment. (goggles and gloves)

ELIET recommends cleaning the machine after each use. We recommend performing an inspection each time you clean the machine to check component and machine integrity. This allows timely intervention and prevention of any defects. This will ensure a longer service life for your machine.

Failure to clean the machine can cause:
- Increased wear of the bearings
- Accelerated wear and tear of drive belts/chains
- Increased wear and tear of seals
- Reduces engine cooling, increased wear of the engine
- Increased risk of fire
- Inability to notice cracks or tears
- Damage to the paint
- Illegibility of safety stickers



Caution: Failure to perform the daily clean-up will void the warranty.

The following points require special attention:

- The engine must be free of dust and dirt. The cooling fins in particular as well as the area around the exhaust must be clean. The area around the fuel cap must be kept clean to avoid dirt entering the fuel tank.
- Build up of earth and dirt under the guard of the drive belts. Regularly remove this covers for inspection and cleaning if necessary. By regularly removing the protective covers, you can also check, lubricate and tighten the driving elements such as belts and tension rollers.
- Built-up dirt around the blade carriage and blade holder can also cause the machine to work ineffectively. The area around the blade carriage equipment for the work depth-setting must be cleaned.
- The bushings and guidance shafts must be cleaned of sand and dirt that has become stuck in the lubricating grease. Reapply lubrication after wiping. (read § 11.5.1; page 66)
- The zones around and inside the tracks have a tendency to gather mud. The tracks and sur-

rounding area must be cleaned and lubricated.
- Remove dirt from the chassis and more specifically from the stickers with safety instructions.
- All soil attached to the blade must be brushed off and the blade must be cleaned.
- Use a dry cloth or soft brush for any cleaning. Use penetrating oil with MoS2 to remove grease and lubricants. The spray is a lubricant and rust solvent at the same time.
- Where possible, use compressed air to clean machine parts or areas that are difficult to reach.
- Stubborn sticky dirt must be soaked with water to make it easier to brush off.
- The manufacturer does NOT recommend use of a high-pressure cleaner. The high-pressure water jet reaches places where water should be avoided. The force of the water jet can pierce seals and dust guards. Water is the number one cause of rust and this must be avoided at all times.
- Clean the air filter.

Any necessary replacement and/or repair works must be undertaken immediately. Ask your authorised ELIET dealer to carry out repairs (find an authorised ELIET dealer near you at **www.eliet.eu**).

9.9. Lifting the machine

The machine has a hoisting eye that can be used to lift it with a crane of hoist, to take it to places that are otherwise inaccessible in the normal manner. When conducting certain maintenance it is necessary to lift the machine onto a work bench. This can be done with hoist or the hoisting equipment of a forklift.



Warning: when lifting, make sure that the machine does not hook onto the operator and cause him to fall. Wear closely fitting work clothes. Always make sure that the machine does not land on a foot when being returned to the ground. Keep a sufficient distance and wear sturdy work shoes with a steel cap.

- Place the machine under the hoisting equipment. Make sure that the cable, chain or hoisting strap of the hoisting equipment are always vertically above the hoisting eye. This will prevent the machine from swinging as it is hoisted.
- Always turn off the engine before hoisting the machine.
- Check whether the 4 M8 bolts with which the hoisting eye is attached are firmly tightened (ring wrench size 13).
- Attach the hook in the hoisting eye. Choose a sufficiently large hook so that the safety catch on the lifting hook closes nicely after hooking in. When using the hoisting strap you must inspect the strap for any damage. Slide the hoisting strap through the hoisting eye. Make sure that the hoisting strap is not twisted.



Caution: the weight of the machine alone (without the option extra front weight) is 195 kg (430 lbs). Make sure that the hoist is appropriate for lifting this weight. You must only use hoisting elements (chains, cables, hoisting belts, etc.) that have been recently certified.

- The position of the hoisting eye should be chosen so that the machine is balanced when lifted. However, this does not take into account an optional front weight that may be attached.

Attention: before lifting, always remove the front weight. (read § 9.2.4; page 35)



Caution: keep bystanders at a safe distance (10 m - 30ft).

- Choose a slow lifting speed to minimise the impact of inertia.
- Do not lift the machine any higher than necessary.



Caution: do not walk/stand beneath the load.

- Do not leave the machine hanging in the air any longer than necessary.
- The machine should only be placed on a surface that can support the weight of the machine.

9.10. Tightening the tracks

Tracks typically stretch over the course of several working hours.
This can cause them to come loose, leading to the potential risk of them falling off. You must re-tighten the track as necessary.

- To do so, place the machine on a flat surface.
- The track system features tightening rods on the back rollers.

- To re-tighten the track you must loosen the back shaft. To do so, unscrew the two M8 bolts **(1)**. Use a size 13 ring wrench in an anti-clockwise direction until there is no tension on the bolts.

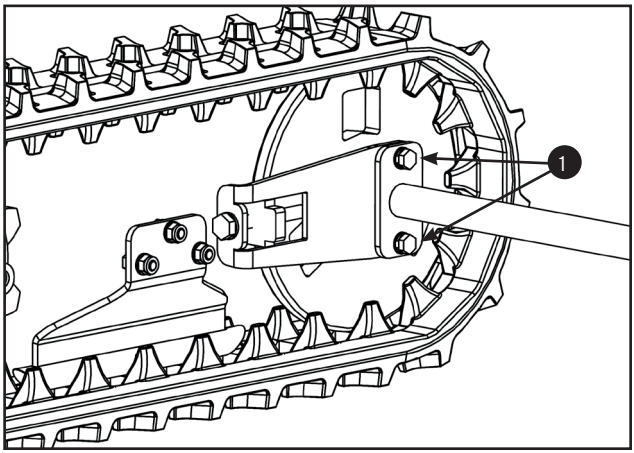

- Then loosen the M10 counter nut **(2)** on the tension rods on each side of the machine and turn (anti-clockwise) a further 2 cm (7/8") on the threaded bolt **(3)** (open-ended wrench size 17).

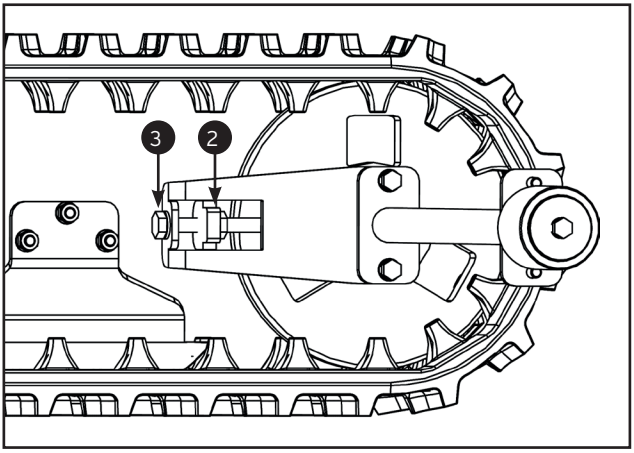

- Now screw the locking bolt M10 further in (clockwise) so that the back shaft is pressed backwards and the track becomes tense. (ring wrench size 17). Do this on each side of the machine until the correct tension is achieved.

- The tension is sufficient when you rest a front weight of 20 kg (44 lbs) in the middle of the track and with the deflection you measure a minimum distance of 25 cm (10") between the ground up to the top of the track.

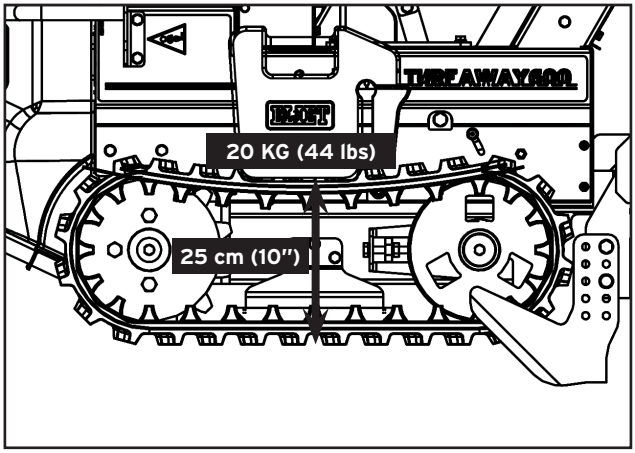

- Once the tension is set correct on each side, the M10 counter nut should be tightened clockwise again to retain the setting (wrench size 17).
- Then the back shaft must be fixed again by tightening the bolts (M8) on each side (ring wrench size 13).

9.11. Fault diagnosis

9.11.1. The engine fails to start after idle periods.

If the machine fails to start up after periods of inactivity, then this could be the result of any of the following causes:

a. Lack of petrol UK (gas in USA)

b. Petrol UK (gas in USA) is stale

c. Bad spark plug

d. Lack of oil

e. Contamination

a. Lack of petrol UK (gas in USA)
First check that the fuel valve (if any) is open.
In § 12 - Storing the machine - you are advised to remove any residual petrol UK (gas in USA) before long term storage of the machine. It may be the case that you forgot to refuel the machine. Check that the tank is adequately filled and refuel if necessary. A few attempts to start will be necessary to pump the petrol UK (gas in USA) into the carburetor. Close the choke lever - the petrol UK (gas in USA) will now be sucked into the line. The engine will start running as soon as the carburetor has filled.

b. Petrol UK (gas in USA) is stale
Petrol UK (gas in USA) has a limited shelf life. Petrol UK (gas in USA) that has been sitting in petrol UK (gas in USA) tank for more than a few months can cause starter problems. It also smells totally different than fresh petrol UK (gas in USA).
Pump out the contents of the fuel tank and refuel with fresh petrol UK (gas in USA).

Tip: it is advised to add an additive to the petrol UK (gas in USA) to extend the shelf life. Such an additive is available from the authorised ELIET dealer.



Caution: be careful, even stale petrol UK (gas in USA) can still be extremely flammable.

c. Bad spark plug
Without proper ignition, it will be impossible to get the engine up and running. Therefore, check whether the spark plug has proper ignition. (read § 11.6.2; page 75)

d. Lack of oil
The engine's crankcase is filled with engine oil to lubricate and cool the pistons. Lack of oil can lead to increased wear of the engine. To protect the engine, the machine has been equipped with an internal level control. This will disengage the engine if the machine is low on oil. Check the oil level and refill if necessary. (read § 11.4.3; page 64)

e. Contamination

If a machine falls over or is tipped in a position where oil or petrol UK (gas in USA) can leak into the cylinder space, this can either cause the spark plug to become greasy, preventing an ignition spark. Or the cylinder space above the piston can become full, which stops it moving. This prevents you from pulling the starter rope. Dirt in the fuel can block the carburetor, preventing fuel from entering the cylinder.
Consult your authorised ELIET dealer to clean and restart the engine.

9.11.2. Engine stalls during operation

If the engine suddenly shuts off during operation, this could be the result of a number of factors:

a. Lack of petrol UK (gas in USA)

b. Lack of oil in the engine

c. Machine is on a slope

d. Overload

e. Technical defect

Take the following steps to restart the machine in any of the cases below:

a. Lack of petrol UK (gas in USA)

If you fail to monitor the petrol UK (gas in USA) level and do not notice that the tank is running empty, the machine may suddenly switch off. If this occurs, simply refuel.
Repeat the starting procedure to pump fuel.
In doing so, close the choke lever - the petrol UK (gas in USA) will now be sucked into the line. The engine will also start running as soon as the carburetor has filled. **Caution:** after pulling on the starter rope a few times the choke valve must be opened again to prevent the spark plug from becoming greasy.

b. Lack of oil in the engine

(read § 11.4.3; page 64)

c. Machine is on a slope

Whilst working on a slope in the lengthwise direction, the engine may suddenly stop. The oil protection is the cause of this. Since the oil alarm works on the basis of level measurement; it detects a false oil level when the machine is in a slanted position. This is enough reason for the system to switch off the engine.

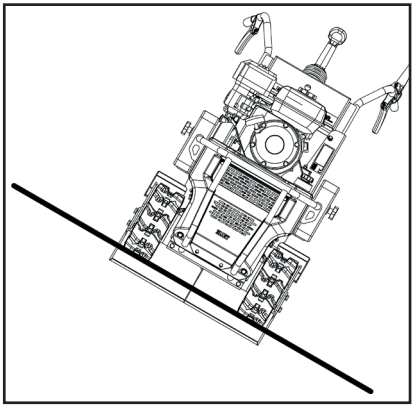

(Place the machine with the left flank on the side of the valley in order to start up again).
The solution is to wait a few moments before restarting the engine on a level surface. The problem will reoccur if you continue to do work on a slope. After checking the oil level on an even surface (read § 11.4.3; page 64) , the oil safety system may be disengaged temporarily. Do not forget to switch it back on afterwards.
Neither ELIET, nor the engine manufacturer, shall accept warranty claims based on a lack of oil in the machine.
If slopes are a recurring factor in a particular area, adding 0.2 litres of extra oil to the tank will resolve the problem.

d. Overload

- By impacting a foreign object in the ground (e.g. tree root), the blade can get stuck on it and the engine can block. In this case you will need to free the blade from the ground and then you can start again. Mark the zone where this occurred and be alert when approaching this area in adjacent strips.
- If the machine is struggling (e.g. in heavy ground) you may be working at the limit of the engine capacity. Check the engine revolution rate, make sure it is driving at full throttle and reduce the driving speed. If possible, adjust the angle of approach of the blade to create less resistance.

e. Technical defect

If neither of the aforementioned checks identifies the cause, the problem could be more technical in nature. A defect in the engine or a problem with the carburetor or ignition could be the issue. For assistance with these problems, please visit your authorised ELIET dealer or an authorised service centre for the engine brand.

9.11.3. The blade is not moving or is irregular

If the blade stops moving while at work, or no longer has a balanced rhythm, there are several possible reasons:
The cause of these symptoms will be found in the power train. To find the cause it is worth removing the guard from the drive belts: (read § 11.5.3; page 71)

a. Broken cable:

Over time, wear can occur on the cable between the operating lever and the tensioning roller for the belt drive. Occasionally this can cause the cable to break. This means the drive will not longer work and the blades will come to a standstill. As an operator you will notice that the operating lever no longer springs back when you let it go. Consult your authorised dealer to replace the cable.

b. Belt tension:

Drive belts tend to stretch when at work. Belts tend to stretch most in the first hours of work after first use or after replacing the belts. As belts get longer, the tension reduces when the drive is coupled. This can cause slippage when pressure is applied. Slipping will cause the blade movement to be interrupted. When the belt slips it can cause a peeping noise. It is necessary to adjust the belt tension: (read § 11.5.3; page 71)

c. Broken belt:

A drive belt can break at the end of its life. The drive towards the blade has two belts. If one of the two belts breaks, the entire load is carried by a single belt, which is also nearing the end of its life. In this case slippage may occur, causing irregular movements of the blade. In this case it is recommended to replace both belts. Consult your authorised ELIET dealer for more information.

d. Technical defect:

If neither of the aforementioned checks identifies the cause, the problem could be more technical in nature. It may concern a defect in the transmission box, connecting rods, carriage, belt discs, etc. Visit your authorised ELIET dealer to have them carried out.

9.11.4. The machine will not drive or is driving irregularly.

If the machine feels jerky when driving or always veers off in one direction there will be a disruption to the drive. This could be caused by a number of reasons:

a. Broken cable:

The command to activate the drive is given by a lever which activates the primary belt drive to the hydrostatic pump via a cable. This cable is subject to wear and can also break after some time. If the cable breaks, the drive becomes uncoupled. This is immediately obvious because there is no longer resistance on the operating lever. In this case, the cable must be replaced. Consult your authorised ELIET dealer.

b. Belt tension:

The belt that drives the hydrostatic pump tends to stretch. This means that the tension on this belt decreases over time. At a certain moment this can cause a belt to slip. When it slips, the drive briefly stops causing the machine to splutter when driving. Also, when more pressure is placed on the drive (e.g. driving up a slope) this belt can slip causing a loss of traction. When the belt slips it can cause a peeping noise. This can be resolved by tightening the belt tension: (read § 11.5.3; page 71)

c. Broken belt:

A single belt transfers the engine capacity to the hydrostatic pump. Every drive belt can break at the end of its life. If the belt breaks, the drive to the hydrostatic pump stops, thus stopping the machine. Consult the authorised ELIET dealer to replace this belt.

d. Oil leak

The drive to the tracks is hydraulic. This is a closed circuit. If there is a leak in this circuit there will be a leak of oil. The drive cannot work if there is insufficient oil. A leak is visible because traces of oil are found under the machine. Check the oil level in the hydraulic tank. However, a leak can also cause air to enter the hydraulic circuit. Air in the pipes leads to irregular operation of the hydraulic pomp and the hydraulic motors. Try to track down an oil leak as quickly as possible. Consult the authorised ELIET dealer to resolve this problem.



Warning: A leak in the hydraulic circuit can generate a high pressure jet of oil. This jet can perforate skin and limbs, as well as damaging the senses. As soon as a trace of oil is spotted, turn off the machine to find the leak.

e. Breakage in operating rods:

The joystick is used to determine the driving speed and control the machine. The movement of the joystick is transferred by rods up to the setting levers on the hydrostatic pump. If one of these rods comes loose or breaks off it is no longer possible to control the machine correctly. You must check the levers and repair the defect. If necessary, consult the authorised ELIET dealer.

f. Track tension:

The tracks run on a large driving sprocket and tension wheel. If the track is very tight more resistance is required. When there is a significant difference in track tension, the machine may keep veering in the direction of the tightest track. The track tension must be adapted. (read § 9.10; page 50) .

g. Dirty tracks:

During transport of the machine a foreign object (stone, stick, clump of earth, etc.) may end up between the driving sprocket and the track. This foreign object may hinder the rotation of the track. The machine will then tend to turn to one side. This is soon fixed by driving in the other direction. If this is possible, it is a sign of a local obstruction. This is soon discovered. Remove the obstacle and try again.

9.11.5. The blade does not switch off

If, when uncoupling, the blade keeps on moving, this means that the drive belt is still active. The cause can be found in the cable which connects the operating lever with the tensioning roller. If this cable gets stuck in the cable guide due to dirt or damage it will not automatically spring back when uncoupled. Check if there is no kink in the cable guide. Check whether the cable slides through the cable guide with minimum resistance. Repair, replace or clean the cable/duct so that the cable can again slide smoothly through the duct.

10. Transporting the machine

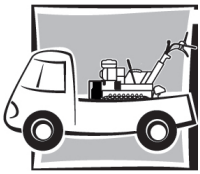



Caution: when transporting the machine you must wear the appropriate work clothing and personal protective equipment.



Caution: during transport, keep bystanders and animals at a safe distance of 10 m (30ft).

- It is not possible to drive the Turfaway600 without activating the track drive. In other words, the engine must always be running to move the machine.
- Only adults are permitted to move or transport the machine.
- Carefully choose a clear and free transport path, preferably one with as few obstructions as possible. The transport route should preferably be flat, with an even surface.
- To drive the machine between two work zones, always place the blade in the raised position.
- Use two non-slip loading ramps of 30 cm (12") when loading the machine into a van or onto a trailer. Ensure that the planks are properly fastened to the vehicle or trailer. Under no circumstances should the upwards slope exceed 25°.
- Ensure that the loading ramps are able to support the weight of both the machine (195 kg - 430 lbs) and the operator.
- Place the two ramps so that each track drives in the middle of the ramp.
- Attention and care while loading and offloading the machine can prevent it from tipping over and causing an accident.
- The revolutions of the engine should be reduced a little to make the machine less responsive.



Caution: when driving forwards up or down a slope the blade may touch the ground at the kink in the valley. Also, you must be careful when reaching the top. Once the machine's centre of gravity is past the top, the machine will tip forward. Watch out not to lose control over the drive. Always moderate your speed.

- The machine's ground clearance is 8 cm (3"), excluding the blades.



Warning: when loading the machine with the aid of loading ramps, always check that the loading ramps are firmly fixed to the vehicle. Indeed, the traction force of the tracks can make the ramp slide off, causing this to come loose from the vehicle, making the machine tip and fall.

- The operator could end up under the machine, causing serious injury or death. Care and attention is required.
- If the machine topples over for some reason, set it upright as quickly as possible. This prevents oil from the crankcase entering the air filter.
- Make sure the machine is securely tied down to the vehicle during transport. Use the attachment points provided to fix ropes or tension straps. Also, only use fixed chassis parts to attach ropes or tension straps.
- Several attachment points have been provided. These are indicated with a pictogram.

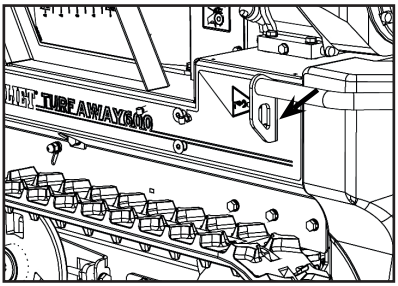

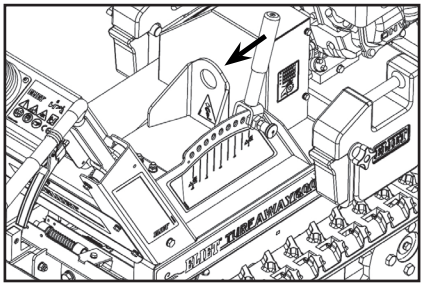

- The machine also has a hoisting point, allowing it to be lifted with a hoist or crane into the work environment.
- When storing the machine you should aim to ensure that the engine runs as little as possible inside a building. Always provide sufficient ventilation.



Warning: never allow the machine to run for more than 30 seconds in a closed environment where animals or people are present. Exhaust fumes from petrol UK (gas in USA) engines contain harmful substances that can cause poisoning or suffocation and death.



For your information: machine breakage or defects resulting from incompetent operation are excluded from the warranty conditions.



For your information: always close the petrol UK (gas in USA) valve on the machine before transport. Failure to do so may result in excessive amounts of petrol UK (gas in USA) being fed into the engine, causing starter problems and the risk of having to change the spark plug.

11. Maintenance



11.1. General

ELIET recommends bringing the machine to an official ELIET dealer for a full service every year (find an authorised ELIET dealer near you at **www.eliet.eu).** Your ELIET dealer is at your service for maintenance and advice at all times. They stock original ELIET replacement parts and lubricants. Their staff can always obtain advice and service from ELIET's help desk in order to provide you with an impeccable after-sales service.



Caution: incorrectly performed maintenance may compromise the operator's safety. Only those with knowledge and sufficient technical experience may carry out maintenance.



Caution: Use only genuine ELIET spare parts when performing repairs. These machine parts are manufactured according to the same strict quality requirements and craftsmanship as the original equipment. For a list of original spare parts and their ordering codes please visit **www.eliet.eu**.

Maintenance must always be carried out in a designated area. The area must meet the following criteria:

- Spacious
- Dust-free
- Easily accessible
- Clean and tidy
- Well lit
- Quiet

These characteristics are important to do a proper maintenance.



Caution: maintenance must always be carried out with the engine turned off. As a precaution, the spark plug should also be removed.



Caution: Always wear safety gloves and safety goggles when performing maintenance. Additionally, hearing protection may be required for certain operations.

11.2. Periodic maintenance schedule

The new machine should be returned to the ELIET dealer for the first maintenance after the first 10 hours of operation. This concerns: tightening the drive belts and replacing the first engine oil.

Thereafter, the maintenance schedule to be followed is:

a. Routine check after each work session on page 62
- Cleaning the machine. (read § 11.4.1; page 62)
- Visual check of the state of the machine. (read § 11.4.2; page 62)
- Checking and topping up the engine's oil level. (read § 11.4.3; page 64)
- Cleaning the air filter. (read § 11.4.4; page 65)

b. Maintenance after every 25 hours of operation on page 66
- General lubrication. (read § 11.5.1; page 66)
- Renewing engine oil. (read § 11.5.2; page 70)
- Checking and adjusting belt tension. (read § 11.5.3; page 71)
- Checking and sharpening blade. (read § 11.5.4; page 72)

c. Maintenance after every 200 hours of operation on page 75
- Changing the air filter. (read § 11.6.1; page 75)
- Checking or changing the spark plug. (read § 11.6.2; page 75)

d. Maintenance after every 400 hours of operation on page 76
- Replacing the hydraulic oil. (read § 11.7.1; page 76)
- Replacing the hydraulic oil filter. (read § 11.7.2; page 77)
- Replacing blade. (read § 11.7.3; page 79)
- Replacing belts. (read § 11.7.4; page 80)

11.3. Lubricants

Engine	MOBIL DELVAC MX 10W30
Hinges	NOVATIO PTFE OIL
Lubrication nipples	MOBILGREASE XHP222
Cables and cable guides	NOVATIO PTFE OIL H1
Bearings	NOVATIO CLEAR LUBE-S
Hydraulic oil	MOBIL UNIVIS N32

11.4. Routine check after each operation

11.4.1. Cleaning the machine

The machine should be cleaned as quickly as possible after the working session. Since the Turfaway works in soil, dirt will mainly be caused by earth sticking in the area around the blade and blade drive and in the zone around the tracks. In addition, sand and soil dust can remain in openings and cavities or collect on machine parts or in lubricants. Hinges, rubbing surfaces and cable guides are most disrupted by this. Therefore, you must clean these zones in particular.
"9.8.1. Cleaning the machine" on page 43

11.4.2. Visual check of the state of the machine

It is essential to inspect the machine after every use. This means that breakage and wear can be discovered early on. Then, the required repairs can be carried out to ensure that the machine remains in good condition ready for the next use. Some points deserve special attention:

- Check the state of the blade (both the horizontal and the vertical part). This must be replaced as soon as distortion or breakage is identified (order number BU 105 041 150). If the cutting edge has become blunt this must be sharpened. (read § 11.5.4; page 72)
- Check whether the bolts attaching the blade are still tight.
- Check the entire power train for the blade. In doing so you must check whether machine parts have come loose and for traces of wear or corrosion.
- Check for slack or excess tolerance on moving machine parts (e.g. driving rods, blade carriage, locking bolts, operating rods, etc.)
- Check that the protective covers are securely fastened.
- Check there are no visible leaks in the hydraulic power train.
- Check that cables can move properly in their ducts and work properly when activated.

In order to properly inspect the blade power train you must look at the underside. Life the machine with a hoist and allow it to rest with the front of the tracks on a workbench. Keep the hoist tight. In this way you can get a good look at the underside of the machine and have access to carry out checks.

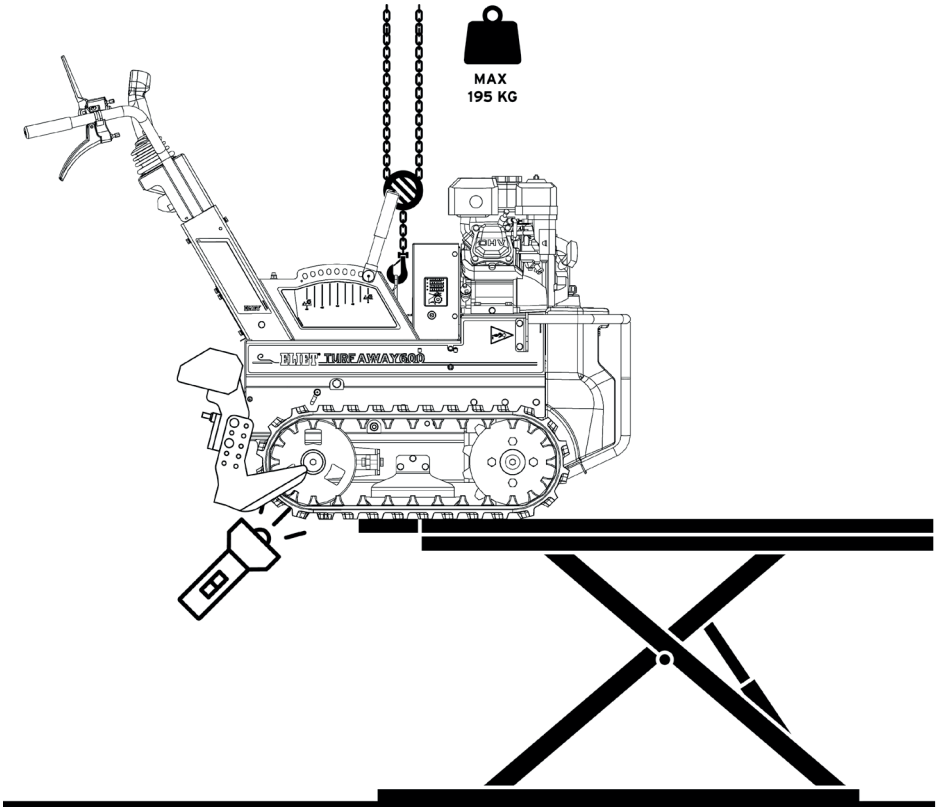



Caution: the weight of the machine alone (without the option extra front weight) is 195 kg - 430 lbs. Make sure that the workbench and hoist can cope are suited to this weight. You must only use hoisting elements (chains, cables, hoisting belts, etc.) that have been recently certified. Check the stability of the workbench before allowing the weight of the machine to rest on it.

If problems are found, carry out the necessary repairs first. Consult your authorised ELIET service centre for assistance if necessary or for spare parts. Find an ELIET service centre near you at **www.eliet.eu**.

11.4.3. Checking and topping up the engine's oil level

If the oil level in the engine drops below a certain level, the engine will automatically switch off. At that point, the machine will have been operating with insufficient lubrication for some time. This can increase wear, which will reduce the life of the engine. In order to avoid this situation, regular checks on the oil level are essential.

- Place the machine on flat ground so that the engine plate is horizontal.
- Switch off the engine.
- Leave the engine to cool down for about 15 minutes.
- Now unscrew the filler cap **(1)** from the crankcase.
- The oil must be visible up to the edge in the opening of the stopper **(2)**.
- If the oil tank is not filled to the brim, this indicates a lack of oil.
- If the oil level is too low **(3)** it suffices to add some oil via the filler opening until the proper level has been reached. Continue to add oil until the desired level is reached.
- Always use recommended oil (see the list of recommended oils in the engine manual).
- Since the location of the filler opening is tricky to reach, we recommend using a tube or special funnel to avoid oil spills. Always clean the funnel before passing any oil through it.

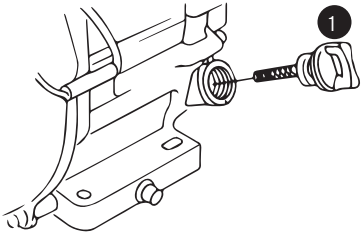

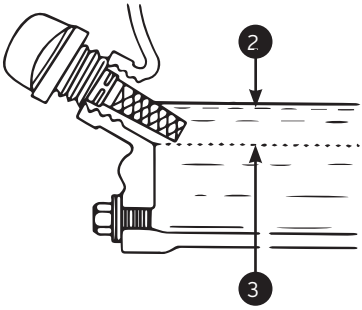



Caution: Bear in mind that it will take a while for the oil to fully descend into the crankcase. Make sure you leave small intervals when filling the oil so that the dipstick gives the correct oil level reading. Oil shortages cause severe, irreparable engine damage. (This type of defect is not covered under warranty).



For your information: The above description is for indication purposes. You must also read the manual provided by the engine manufacturer.

Work slowly and carefully when topping up the oil, as the amount of oil to be added is mostly quite small. Avoid spilling oil. Oil spills must be wiped up immediately with paper. Dispose of the soaked paper in the chemical waste.

11.4.4. Cleaning the air filter

- The type of air filter depends on the engine brand and type.
- The air filter is located under the black protection cover next to the fuel reservoir on the engine.
- Release the black protective cover by loosening the screw on the top side.
- There are two types of filters. In addition to the common sponge filter, there is also a paper filter.
- Loosen the attachment bolt at the top of the filter cartridge so that you can remove it.



Caution: When removing the air filter, always make sure that no objects can fall into the opening of the carburetor. As a precaution, cover it with a clean piece of paper.

- Sponge filters can be cleaned by rinsing them with some petrol UK (gas in USA) and blowing them with compressed air.
- Paper filters are cleaned by dusting them down or cleaning with compressed air.

Caution: Keep the air pistol at a good distance from the filter to prevent the powerful jet of air from perforating the cartridge filter.

- If the air filter is too dirty, it should be replaced. Contact the engine manufacturer's service centre and order the original replacement air filter there.

Please note: Always make sure that the filter cartridge fits nicely in its place. It is important to make sure there is no gap through which unfiltered air can enter the engine. Dirty air in the engine will result in irreversible engine damage!

- After cleaning, return all parts to their original positions.



Caution: In the event the machine has toppled over for some reason, check the air filter immediately. The tilted position of the engine may have caused oil to seep from the crankcase via the carburetor onto the air filter. Oil on the filter paper obstructs the air passage. Soiled filters must be replaced immediately.



For your information: The above description is for indication purposes. You must also read the manual provided by the engine manufacturer.

11.5. Maintenance after every 25 hours of operation

11.5.1. General lubrication treatment

To keep the machine in top condition and maintain the optimal performance it is essential to regularly lubricate the machine. ELIET recommends lubricating the machine and checking surfaces subject to friction/wear (periodicity of approx. 25 hrs).

Machines parts requiring lubrication:

I. Friction areas

1. Nylon guide for the blade holder (2x)
2. Contact surface between the side wall and the mobile scale bar for the work depth-setting (2x)
3. Sloping surface on scale bar for the work depth which suppresses locking pin (2x)
4. Guide slit scale bar work-depth setting
5. Adjustment knob for depth selection
6. Guide locking pins for work-depth setting (2x)
7. Connection point between hoisting arm and the scale bar for the work-depth setting (2x)
8. Guiding rods for the blade carriage (2x)

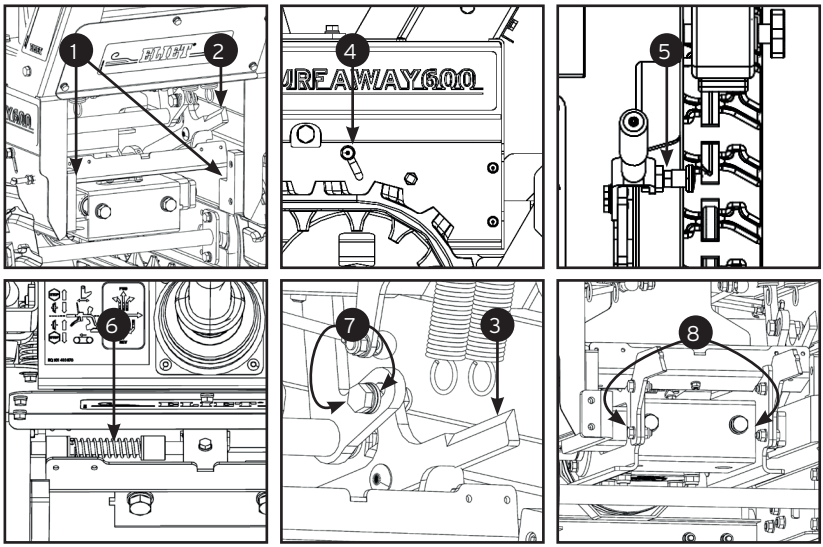

On these friction surfaces you must ensure there is lubricant between the rubbing parts in order to reduce the resistance on the movement and prevent the elements wearing.

- Before applying new lubricant you must clean the friction surfaces.
- First spray the friction zones with a cleaning agent. Leave this to work for a few minutes. ELIET recommends NOVATIO KLEENSPRAY-S.
- Wipe away old lubricant with a cloth or paper tissue.
- Once the friction zones are clean, new lubricant can be applied to the contact areas. Consult the list of lubricants in "11.3. Lubricants" on page 60.

II. Hinges

Several articulation points are equipped with self-lubricating nylon bushings. Since this concerns dry lubrication there is no need to apply lubrication. However, you must still check these parts for wear or dirt. This could cause excess slack, leading to breakage or poor operation. Dirt could cause hinges to get stuck and prevent the machine from working properly.

The points with dry lubrication are:

1. Hinges on the arm for the tensioning rollers for belt drive
2. Hinges on the setting arm for work-depth setting
3. Hinge for operating rods to hydrostatic pump
4. Joystick hinge

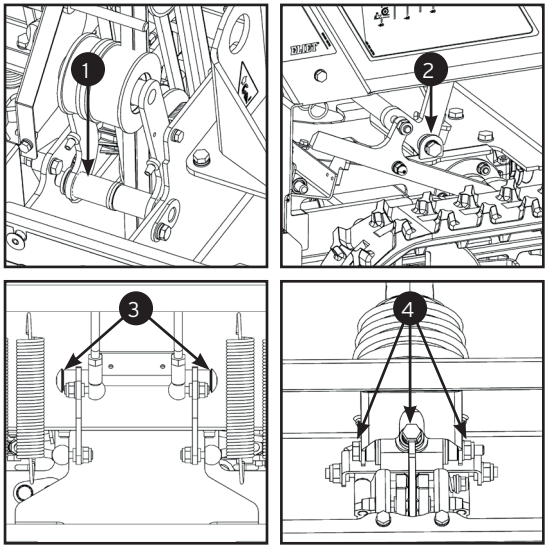

If slack is perceived at these points the machine must be taken to the ELIET dealer for repair.

The machine has a number of hinges that require lubrication:

a. Ball joints on the operating rods to the hydrostatic (6x)
   - Before lubricating these hinges, where possible first remove the old lubricant. To do so, spray a cleaning spray and allow the product to work. ELIET recommends NOVATIO KLEENSPRAY-S.
   - Wipe off the cleaning spray and blow the zones clean with compressed air.
   - Inject the hinging parts with new lubricant. Use the lubricants listed in "11.3. Lubricants" on page 61.

III. Bearings

The bearings used in the machine are dust tight and contain lubricant for life-long lubrication. However, it is still advised to provide lubricant in the friction zones between the seal and the lubricant canister to prevent wear here too. Lubrication in these zones will also act as protection from the dust that penetrates here.

The following bearings are fitted in the machine:

1. Bearings on the angle gear box (3x)
2. Bearings for blade holder hinge (2x)
3. Bearings in the connecting rod (4x)
4. Bearings in the tensioning rollers track (4x)
5. Bearings in the tensioning rollers (4x)

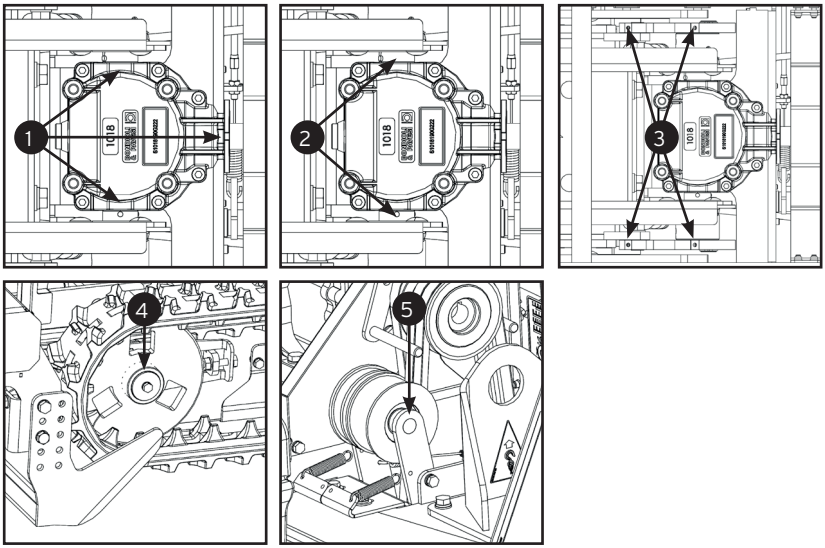

- To access the bearings you must remove the relevant guards.
- Prior to re-lubricating the bearings they must be cleared of old lubricant and deposits as much as possible. Cleaning spray aimed at the bearings and in the bearing joints will do the job easily. ELIET recommends NOVATIO KLEENSPRAY-S.
- Allow to work for several minutes so that the dried lubricant can soak off.
- Blow into the bearing joints with compressed air and brush off all deposits and cleaning agent.
- Repeat the above procedure if not all dirt was removed.
- Check that the bearing does not show excessive play. Also check that the bearing runs smoothly. In the event of defects, consult your ELIET dealer for a bearing replacement in order to avoid future damage.
- Re-apply a high quality lubricant. Spray this into the joints of the bearing seal. Use the lubricant listed in “11.3. Lubricants” on page 61.
- Wipe away any excessive lubricant.
- After lubricating, replace the protective covers as they were originally fitted.

IV. Lubrication nipples

The machine is fitted with only two lubrication nipples. These are fitted on the guide bushings on the blade drive and are there to lubricate the most intensive movement.

- The lubrication nipples are accessed via the bottom of the machine.

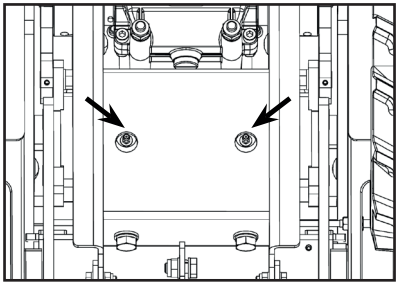

- Use a lubrication pump to slowly pump extra lubrication grease into the bushings. Use the lubricant shown in the list in "11.3. Lubricants" on page 62.



Caution: Stop as soon as pressure is felt when pumping. You must avoid forcing the cap seals out of position.

- Lubrication flowing back out of the lubrication nipples when removing the pump hose must be wiped away with a cloth.

V. Cables and cable guide

The machine has three operating cables. These pay a crucial role in the machine's operation. It is therefore important that these cables lie properly in the cable guide.

Remove the protective covers to make the complete cable route accessible.

- When lubricating, the ends of the cable guides should always be wiped clean.
- Then spray MoS4 based penetrating oil into the ends of the cable guide and allow it to penetrate.
- Press the levers repeatedly so that the cable moves back and forth in the guide.
- While moving the levers, spray small amounts of penetrating oil on the highest end of the cable guides.
- Repeat this for a few minutes until the penetrating oil on the underside of the cable guide drains out.
- Now blow with compressed air into the highest end of the cable so that the penetrating oil is forced out and the dirt in the guide is removed.
- Wipe off any dirt on the underside of the guide.
- Leave the machine for 30 minutes so that all the penetrating oil has drained out of the guide.
- After wiping away the penetrating oil, spray some new lubricant on the cable and in the guide end while again operating the levers.
- Repeat this so that sufficient amounts of new lubricant can penetrate the cable guides.
- After lubricating, replace the protective covers.

11.5.2. Changing the oil

- Before changing the oil, allow the engine to run briefly. When the oil is warm it is more liquid, allowing a faster flow out of the engine block.
- Always turn off the engine before replacing the oil.
- Choose the drain plug on the left of the engine base.
- Since all oil would run out of the crankcase when unscrewing the plug, you must place the machine at an angle.
- To do so, hoist the machine with a hoist, so that a wooden beam of about 10 cm (4") can be placed lengthwise under the right track. Read "§ 9.9 Lifting the machine" on page 49. Then lower the machine until the left track is resting on the ground again.

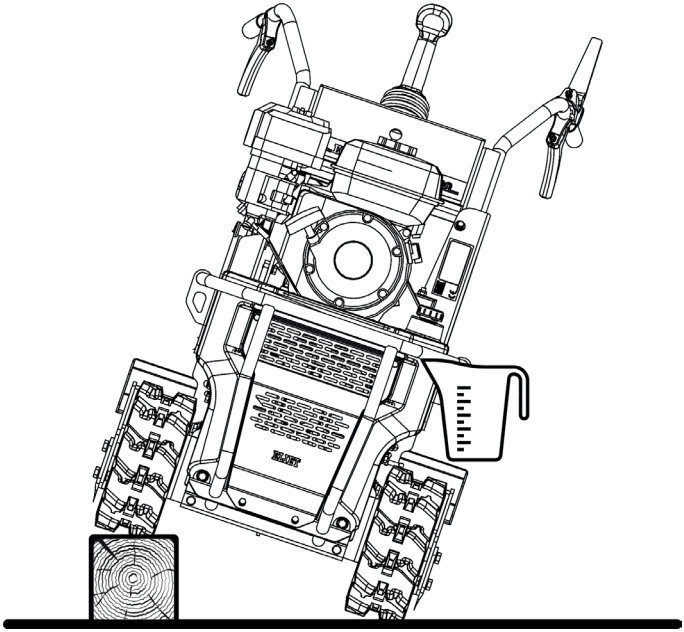

- Get a one litre (1 quart) container before unscrewing the plug.
- Empty the full contents (approx. 0.75 litres (27 fl oz.)) from the engine.
- Replace the plug on the drain. Wipe away any spilled oil with a clean cloth.
- Now re-hoist the machine and remove the beam from under the right track. Place the machine back on both tracks. Choose a flat surface (not a slope) when doing so.
- Refill the engine with fresh 4 stroke oil. ELIET recommends a top-quality oil. Consult the list of lubricants on § 11.3 'Lubricants'.
- Clean the area around the filling openings to prevent dirt from entering the crankcase.
- Fill approx. 0.75 litres (27 fl oz.) of oil into one of the two oil filler openings. Fill until the oil reaches the edge of the filling opening. Remove any spilled oil after filling.
- Wait a few minutes to allow the level to stabilise before replacing the dipstick cap. If necessary, add some extra oil and then replace the cap on the filling cap.



For your information: The above description is for indication purposes. You must also read the manual provided by the engine manufacturer.

11.5.3. Checking and adjusting the belt tension

The Turfaway has three belts:

- Belt drive for blade: two drive belts BA 521 711 681
- Belt drive for hydrostatic pump: one drive belt BA 521 708 381



Caution: turn the engine off before checking or adjusting the drive belts. Let these cool off long enough to avoid burning yourself on the exhaust.

- Both belt drives are protected by the belt guard. This guard is attached with six M6 fixing bolts. Remove these bolts (by turning anti-clockwise) with a size 10 ratchet wrench.

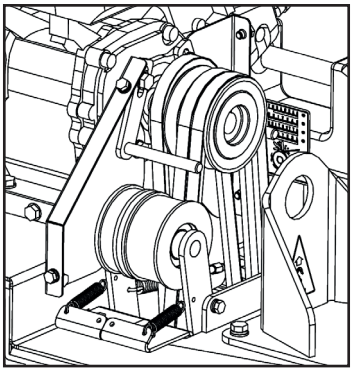

- Every belt transmission is fitted with a coupling, using a tensioning roller.
- Check the tension on the belt by activating the respective tensioning roller.
- To do so, activate the respective lever on the handle. Ask a colleague to help by holding the lever in this position while checking the tension. Hold the lever right up against the handle.
- If the tensioning roller is tense check the tension on the opposite side of the belt. Press the belt with a force of 7 kg (15 lbs) about halfway between the two belt discs. With this pressure the belt will depress by 1 cm (1/2"). If it depresses more, the belt must be tightened more.
- There are two possibilities to tighten the belt at the end sleeves of the cable guides: One in line with the tensioning roller and another in line with the handle. Start by choosing one of these.
- For the adjustment on the lever: unscrew the counter nut (anti-clockwise) (M8 wrench size 13 to hydrostatic disconnection; M6 wrench size 10 for blade disconnection). Then unscrew the cable sleeve (anti-clockwise) (M7 wrench size 12 for hydrostatic disconnection; M5 wrench size 7 for blade disconnection). After each rotation in unscrewing the cable sleeve you must test the tension on the belt. Repeat this until reaching the correct tension.
- Then re-tighten the counter nuts on the cable sleeves (clockwise) (M8 wrench size 13 for hydrostatic disconnection; M6 wrench size 10 for blade disconnection) in order to secure the setting.

- If all options to adjust at the levers have been exhausted, you can then use the options for adjusting on the cable sleeves near the tensioning rollers: To do so, unscrew the counter nut (anti-clockwise) (M6 wrench size 10). Then unscrew the cable sleeve (anti-clockwise) (M5 wrench size 7). After each rotation in unscrewing the cable sleeve you must test the tension on the belt. Repeat this until reaching the correct tension. Then firmly re-tighten the counter nuts (clockwise).
- Once the tension is regulated, carefully replace the guard. Firmly re-tighten the six M6 bolts (ratchet wrench size 10).

11.5.4. Checking and sharpening blade

It is important that you work with a sharp blade and one that is in good condition, in order to work properly and safely. When checking the blade pay attention to 3 things:

a. Blade distortion
b. Broken blade
c. Sharpness of the cutting edge

a. Blade distortion:
- The blade has one horizontal part and 3 vertical parts.
- Check that the horizontal part is not distorted.
- Check that the angle between the horizontal part and the vertical part is still 90°. A side impact can stop the blade from being perpendicular, meaning that the cutting edge is no longer horizontal.
- Replace the blade in the event of defects.

b. Broken blade
- The vertical parts of the blade are welded to the horizontal part. Wear, fatigue or impact can cause the blade to fracture in line with the weld.
- Under no circumstances should the blade be used in this condition. There is a high risk that part of a blade will break off and injure the operator.
- If this is noticed the blade must be taken to an authorised ELIET dealer for replacement or repair.

c. Sharpness of the cutting edge
- The blades will gradually lose their sharp edge as they cut the ground. Once they are blunt the sharp edge of the blades will become a wide edge which increases the resistance when cutting.
- In order to ensure the machine works effectively, the edge of the blade must be regularly checked and sharpened.



For your information: By grinding regularly, you will only have to grind away a small bit of the metal to again obtain a sharp cutting edge. This will ensure very short grinding times and you will always have the best possible cutting edge. (ELIET recommends at least every 25 working hours).

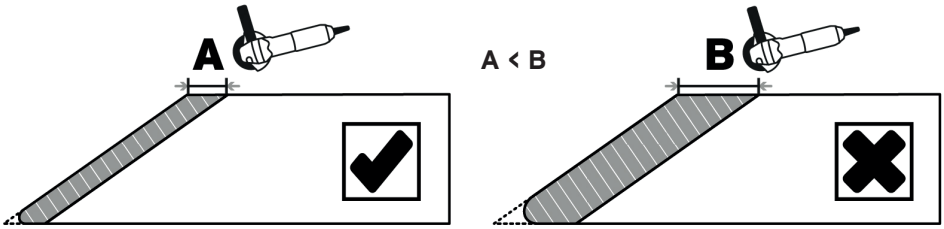



Caution: wear appropriate safety clothes when grinding the blades. Gloves, hearing protection, and above all googles are mandatory.

- In order to grind the blade it must be taken off.
- The blade is attached to the blade holder in three places. The two side blades are attached with two M10 bolts and the central blade with a single M10 bolt.
- Completely unscrew all the bolts (anti-clockwise). To do so use a ratchet and a size 17 ring wrench.
- Secure the blade in a vice.
- For grinding use an angled grinder, with a grinding disc that is suitable for steel.
- The blade has a cutting angle of 20°, and this angle must be maintained when grinding.
- Pass the grinder over the cutting edge. Grind away small layers in several strokes until the cutting edge is sharp again.

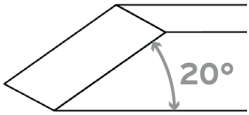

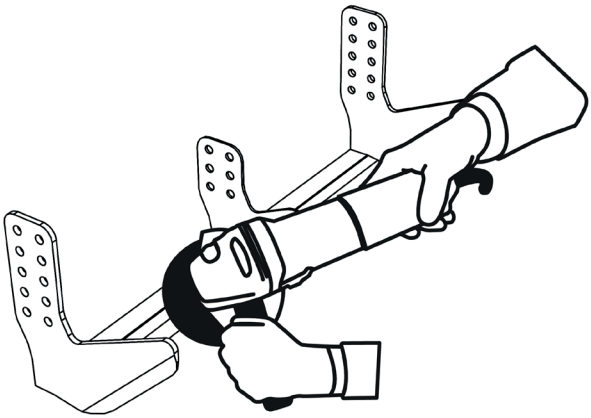

- Avoid grinding in the same location for a long period of time. This causes the steel to heat, causing it to soften.
- Grind evenly (the same angle) over the entire length of each cutting edge.
- Repeat this procedure both for the horizontal and vertical cutting edges.
- Once all cutting edges are sharp the blade can be remounted.
- Replace the five M10 fixing bolts in their original position, but wait before tightening them firmly.
- Now adjust the angle of approach. (read § 9.2.3; page 32)
- Once the angle of approach has been set, you may firmly tighten the bolts again. (Torque 59 Nm)

11.6. Maintenance after every 200 hours of operation

11.6.1. Change the air filter

Despite regularly cleaning the air filter, this is still affected by wear and embedded dirt over time. Microscopic tears or dirt penetrating deep inside the filter tissue can be hard to see with the naked eye. Even so, they will affect the operation of the engine or cause wear and tear. It is therefore important to replace the air filter as a preventive measure after a certain time.

New filter cartridges can be ordered from your ELIET dealer or a service centre authorised by the engine manufacturer. The order code for the cartridge filter is:

- paper: Honda 17210-ZE1 - 822
- sponge: Honda 17218-ZE1 - 821

To replace it, follow the same procedure as described in § 11.4.4.

11.6.2. Check and/or change the spark plug

ELIET recommends the following spark plugs:

Honda GX 200 - 6.5 HP	BPR 6 ES (NGK)

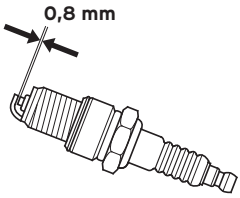

- Turn off the engine and pull the cable from the spark plug.
- Clean the area around the spark plug and remove the spark plug from the cylinder head.
- Using a feeler gauge, check whether the distance between the electrodes is 0.8 mm.
- The spark plug must be replaced if it shows heavy deposits or is very dirty.
- Take the following steps to verify ignition quality:
  - Put the spark plug cap back on.
  - Grab the rubber of the spark plug cap and press the outermost electrode against the mass of the engine.
  - Pull the starter rope.
  - Check for sparks between the electrodes.
  - The spark plug is in good condition if the sparks are clear and neatly centred between the electrodes.
  - Weak, irregular and off-centre sparks between the electrodes indicate that the spark plug must be changed.



Caution: Fitting or changing a spark plug must be done with utmost caution so as not to damage the screw thread in the engine. Secure the spark plug with a torque of 20 Nm.



For your information: **The above description is for indication purposes. You must also read the manual provided by the engine manufacturer.**

11.7. Maintenance after every 400 hours of operation

11.7.1. Replacing the hydraulic oil

It is advised to replaced the hydraulic oil after 400 hours in order to maintain optimal performance of the machine's hydraulic functions.
The whole hydraulic system contains 9 L (9.5 qt) oil. The content of the hydraulic oil tank is 8 L (8.5 qt).

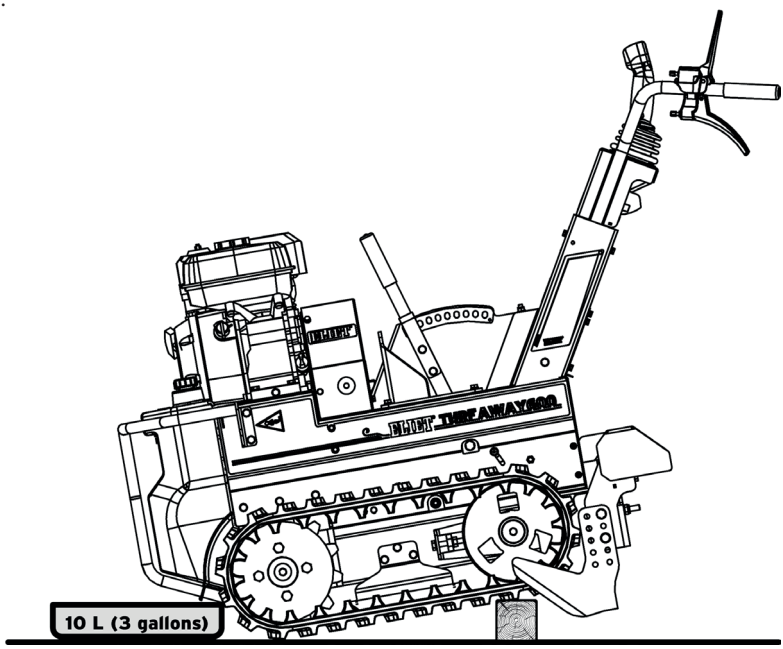

- Before draining the hydraulic oil allow the machine to run for about 5 minutes so that the hydraulic oil reaches operating temperature. Warm oil is more liquid and will therefore run out of the system more easily.
- Place a beam of +/-10 cm (+/- 4") at the back of the track system so that the nose of the machine tips forward.



Caution: When replacing the hydraulic oil the engine must always be switched off.

- An oil drain plug is provided at the bottom of the front of the hydraulic oil tank.
- Take a recipient with a capacity of 10 L (3 galllons) and place this under the drain plug.
- Clean the area around the filling cap and unscrew this so that sufficient air can enter the tank to prevent negative pressure occurring while emptying, which then slows down the process.
- Remove now the drain plug **(turn counterclockwise)**. To do so use a 6 mm Allen wrench.



Caution: Make sure that the sealing ring is not carried away and lost when the oil flows out. The sealing ring Ø19 mm x 3,5 mm (Ø3/4" x 1/8") is available from your authorised dealer under the order code: BH 802 012 350

- Allow all hydraulic oil to drain entirely from the tank. Leave the machine briefly in this position so that the tank can drain completely.
- Then remove the beam from under the machine and return to the horizontal position.



Caution: Under no circumstances should the engine be started or track drive activated when the oil is drained.

- Place the drain plug and sealing ring back on the tank. Make sure that the sealing ring seals evenly against the tank seating.
- Rotate the plug (clockwise) and make sure this presses evenly against the O-ring to ensure a good seal. Slowly tighten the stopper (Allen 6 mm).



Caution: before adding new hydraulic oil also replace the hydraulic filter. Read "§ 11.7.2 Replacing the hydraulic oil filter" on page 77.

- Now refill the tank with 8 L (8.5 quart) hydraulic oil. Use a funnel to prevent oil spills.
- **Attention:** use a clean funnel without dirt or traces of other liquids. Also, make sure that no dust can enter the tank while filling.
- Consult the list of lubricants to find the right type of oil. Your authorised ELIET dealer can always help to supply this oil.
- Once the tank has been refilled, replace the filling cap on the tank before starting the machine.
- Oil spills must be wiped up immediately with paper. Dispose of the soaked paper in the chemical waste.

11.7.2. Replacing the hydraulic oil filter

The hydraulic circuit is a closed circuit. As the machine works the oil gets dirty due to wear on hydraulic components but also via the ventilation valve in the tank. The small particles which then end up in the oil are filtered out by a cartridge filter. After a while this cartridge filter must be replaced together with the hydraulic oil. This filter is installed at the front of the machine near the hydrostatic pump.

- To access the filter, remove the orange cover plate that is fixed to the tank. To do so, undo the four M6 bolts. Turn these anti-clockwise with a size 10 ring wrench.
- In order to prevent the hydraulic oil draining from the tank when undoing the filter, start by releasing the hydraulic oil. Read "§ 11.7.1 Replacing the hydraulic oil" on page 76.
- Then have a container ready to collect the remaining oil left in the filter when the filter is undone. Hold the container under the cartridge filter.
- A central screw thread is provided in the cartridge filter and is used to screw this to the seat. Now turn the cartridge filter in an anti-clockwise direction to undo it.
- Undo the cartridge completely and allow all remaining oil to drain into the container.
- Now wipe away all the oil and also clean the seat of the cartridge filter.
- New filter cartridges can be purchased from authorised ELIET dealers.
  Order code: BH 280 212 010

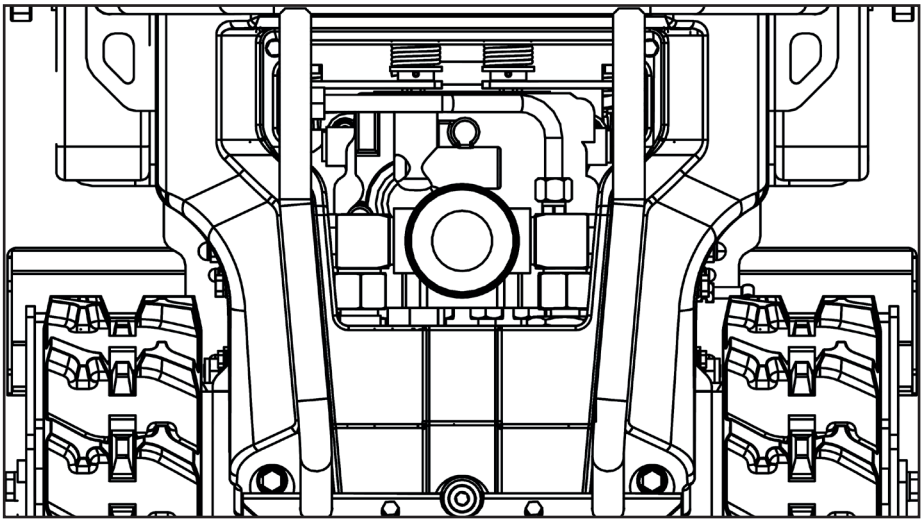

- Drench the sealing ring of the new filter in some oil to moisten it.
- Now fix the new cartridge filter onto the seat.
- Tighten this firmly.
- After refilling the tank with hydraulic engine oil, check whether the filter is properly tightened and does not leak.
- Once the cartridge filter has been replaced, replace the cover (4 screws M6). Use a size 10 ring wrench.



Caution: tighten the locking bolts for the front plate with care. Avoid excess turns when tightening to prevent the nuts in the tank from spinning.

- Oil spills must be wiped up immediately with paper. Dispose of the soaked paper in the chemical waste.
- The cartridge filter must also be disposed of in the chemical waste.

11.7.3. Replacing the blade



Caution: when maintaining the blades, always wear protective safety clothing, sturdy gloves and safety goggles.

When to replace the blade:

- When **distortion** has occurred. (see examples below)

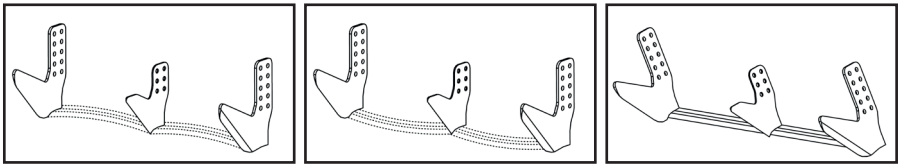

- If the blade has become too thin or narrow due to **wear and tear**. The horizontal part of the blade is 6 cm (2.4") wide and 6 mm thick.

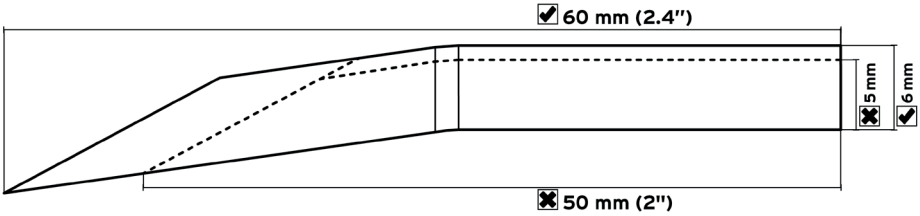

Wear and the resharpening of blades causes material to be removed, reducing the blade width. If the width is down to 5 cm (2") the blade must be replaced. The thickness of the blade will also become thinner when scraping the ground. If you see that the thickness of the material has decreased to 5 mm in several places, the blade must be replaced.

- If there are **breaks** or fracture lines the blade must be replaced.

You must always use an original ELIET blade. This can be ordered from your authorised ELIET dealer using order code: BU 105 041 150.

If, when removing the blade, you notice that nuts or bolts are damaged, perceive wear, or see distortion to the screw thread, this must also be replaced immediately. This can be ordered using order number

bolt M10 x 50 mm (10.9)..... BS 511 001 042

bolt M10 x 30 mm (10.9)..... BS 512 001 030

bolt M10 x 25 mm (10.9)..... BS 512 001 025

locking nut M10 ..... BS 502 001 000

When mounting the blades, you must ensure that the nuts are fitted on the inside of the blade holder. In this way they do not protrude, which could cause damage or injury.

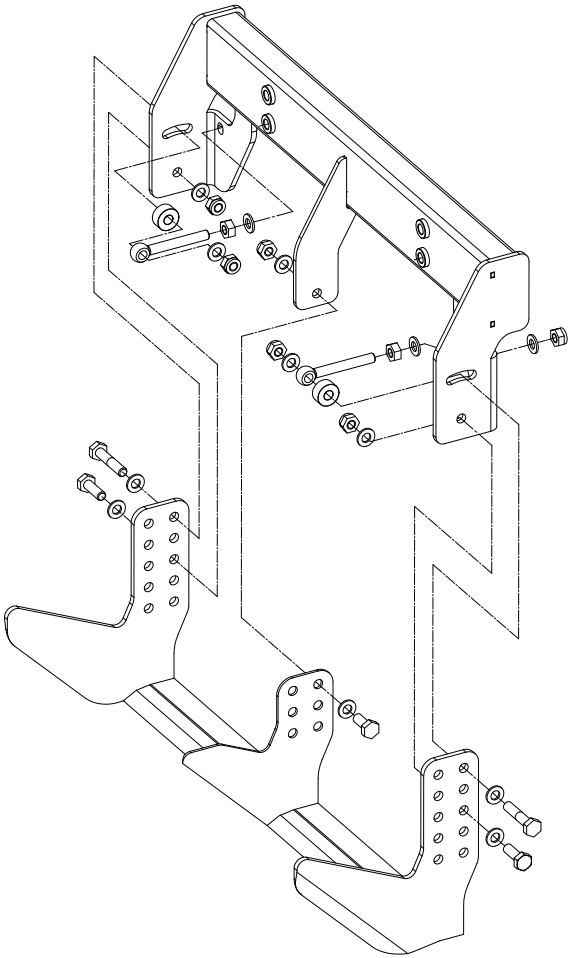

Before tightening the blade, set the correct angle. Read "§ 9.2.3 Setting the angle of approach" on page 32.

Tighten the M10 bolts (clockwise) with a torque of 59 Nm.

11.7.4. Replacing belts

For the replacement of belts, contact your authorised ELIET service centre.

12. Storing the machine



Clean the machine. (read § 9.8.1; page 48)

When storing the machine for an extended period, it is recommended to follow the steps below:

- Carry out comprehensive maintenance (25-hour cycle). (read § 11.5; page 66)
- Check all nuts and bolts and tighten them where necessary. Most bolts require the use of two wrenches, size 10, 13 or 17.
- Empty all fuel from the tank. This can be done simply by letting the engine run until the machine hits empty. Use a siphon if necessary, to pump the petrol UK (gas in USA) into a jerrycan (read § 9.3; page 38)
- Remove the spark plug. (read § 11.6.2; page 75) Spray some MoS2-based penetrating oil into the cylinder. Pull the starter rope until the piston is in its uppermost position. Replace the spark plug.
- To avoid rust on the machine, touch up all chipped areas or treat them with anti-rust grease. Original paints/enamels in the appropriate colours are available from your ELIET dealer.
- Store the machine in a cool, dry place, away from possible rain. If necessary, cover it with a tarpaulin.
- Always allow the machine to cool down before storage.
- If the machine is stored outdoors, it must be properly covered with a tarpaulin. Avoid rain/water from splashing on the machine. ELIET highly recommends a sheltered storage place.



REGISTRATIONCARD
ELIET CUSTOMER SERVICE

To be able to claim the full rights to which you are entitled, it is important to register within a month after the date of purchase. Therefore fill out this registration-form and return the first registrationcard to the ELIET Customer Service. Your purchase should be registered on the ELIET website: www.eliet.be

REGISTRATIEKAART
ELIET KLANTENDIENST

Om als klant, aanspraak te kunnen maken op waarborg dient men zich binnen de maand na aankoop bij ELIET te registreren. Hiervoor vult u onderstaand document volledig in en stuurt het eerste deel van deze registratiekaart naar de ELIET klantendienst terug. Registreer uw aankoop op de ELIET website: www.eliet.be

CARTE
SERVIC

Pour prof
de tous le
vous sont a
tant de regi
le mois suiva
Complétez d
gistrement et
partie au Serv
Registrez votre achat au Site
Internet ELIET: www.eliet.be

Registrationskarte zum ELIET Kundendienst zurück. Registrieren Sie Ihren Kauf ebefalls auf der ELIET Webseite unter: ww.eliet.be

Customer Identity / Klantgegevens / Données du Client / Kundendaten

Name / Naam / Nom / Name

First Name / Voornaam / Prénom / Vorname

Street / Straat / Rue / Strasse

Nr / Nr / N° / Nr

Box / Bus / Boîte / App.

City code / Postnr / Code Postal / Postleitzahl

City / Plaats / Ville / Stadt

Country / Land / Pays / Land

Telephone / Telefoon /Téléphone / Telefon-Nr.

Fax / Fax / Télécopieur / Fax

E-mail

Machine identity / Machinegegevens / Données de machine / Daten Maschine

Model / Model / Modèle / Modell

Year of manufacture / Bouwjaar / L'année de construction / Baujahr

Article Code / Artikel code / Code d'article / Artikel-Nr.

Serialnumber / Serienummer / Numéro de série / Serien-Nr

Date / Datum / Date / Datum

Signature
Handtekening
Signature
Unterschrift

Stamp of dealer
Stempel van handelaar
Cachet de revendeur
Stempel Fachhändler

I declare that all information that was filled in is correct and truthful. I also declare to have read and understood the operations manual and the warranty conditions.
Ik verklaar dat al deze gegevens waarheidsgetrouw werden ingevuld.Hierdoor geef ik te kennen de garantievoorwaarden en handleiding te hebben gelezen en begrepen.
Je déclare que tous les données complétées sont correctes et véridiques. Je déclare également d'avoir lu et compris les notices du mode d'emploi et les conditions de garantie.
Ich erkläre hiermit, dass alle angegebenen Daten korrekt und warheitsgemäss gemacht wurden. Ich erkläre ebenso, dass ich die Garantiebedingungen gelesen und verstanden habe.

Put a crossmark to which application this machine was used
Zet een kruis bij de toepassing waarbij deze machine wordt ingezet
Indiquez avec une croix l'environnement dans lequel la machine a été utilisée.
Kreuzen Sie an, für welche Art von Gebrauch die Maschine bestimmt ist.

- ☐ Home use / Particulier gebruik / Usage particulier / Private Nutzung
- ☐ Profesional Landscaping / Hoveniersbedrijf / Usage Professionel / Gewerbliche Nutzung
- ☐ Forestry / Bosbouw / Forêt / Forstbetrieb
- ☐ Public Groudscare/ Openbare groenvoorziening / Espaces Verts Public / Öffentliche Grünflächenversorgung
- ☐ Rental / Verhuur / Location / Vermietung

Dit document dient binnen de maand na aankoop teruggestuurd te worden naar de ELIET Klantendienst.
This document has to be returned to ELIET Customer Service within a month after purchase.
Renvoyez ce document au Service après-vente ELIET dans le mois suivant à la date d' achat.
Dieses Dokument muss innerhalb eines Monats nach Kaufdatum an den ELIET Kundendienst zurückgeschickt werden.

SPECIMEN

13. Equipment specifications



Motor	Honda GX200
Start	hand start
Capacity	6.5 HP
Depth-setting	0 to -60 mm (2 1/3")
Cutting movements	800 cycl/min
Length of movement	38 mm (1 1/2")
Operating width	600 mm (23 1/2")
Track width	100 mm (4")
Contact surface with ground	960 cm^2
Control	Joystick
Track drive	Hydrostatic
Driving speed	-4 km/hr < 0 > +4 km/hr
Dimensions (L x W x H)	145 cm x 62 cm x 99 cm (4ft 9" x 2ft x 3ft 3")
Weight	195 kg - 430 lbs
Comfort	low-vibration handlebars
Sound power Lw(A)	98 dB(A)
Options	supplementary weight 2 x 20 kg (2 x 44 lbs)
	weight carrier 2 x 1,6 kg (2 x 3,5 lbs)

14. CE Declaration of Conformity



Machine.....Sod cutter
Type ..... ELIET Turfaway600
Model number ..... MA 031 010 206

The ELIET machine factory hereby declares that after performing a hazard analysis, it is fully aware of the potential hazards and risks associated with the machine. Based upon this knowledge, the necessary steps have been taken in line with Machine Directive 2006/42/EC in order to ensure full operator safety when the machine is used correctly.
The value of the measured sound power and the guaranteed sound power were obtained by applying the procedures described in European Directive 2000/14/EC.

Measured sound power level Lw(A): 96 dB(A)
Guaranteed sound power level Lw(A): 98 dB(A)

Date: 15/09/2019
Signature:



Frederic LIETAER
Business Manager ELIET EUROPE NV
born 02/01/1975

ELIET EUROPE NV
Diesveldstraat 2
B - 8553 Otegem
Belgium
Tel: +32 56 77 70 88
Fax: +32 56 77 52 13
E-mail: info@eliet.eu

15. Hazards

- Risk of cuts to lower limbs due to contact with the blade.
- Risk of bruising the lower limbs due to contact with the moving blade.
- Risk of burns due to contact with the exhaust.
- Risk of crushing lower limbs when riding the machine.
- Risk of intoxication due to exhaust fumes if the engine is operated in closed space.
- Risk of squashing, amputating or cutting fingers in the belt drive.
- Risk of squashing feet between the tracks and drive elements.
- Risk of electrocution due to contact with high voltage cables in the engine ignition.
- Risk of fire due to ignition of fuel when refuelling.
- Risk of painful joints due to long exposure to vibrations.
- Risk of strain to the spinal column or back muscles if not lifting the machine ergonomically.
- Risk of becoming squashed between the machine and an obstacle when driving in reverse.
- Risk of ending up underneath the machine in the event of the machine tipping when loading and unloading.
- Risk of ending up underneath the machine in the event of the machine falling due to incorrect hoisting.
- Risk of the hands being squashed between the steering lever and obstacle when driving through a narrow passage or carrying out a manoeuvre.
- Risk of injury due to projection of objects from the ground by the blade.
- Risk of injury due to projection of broken moving parts from the driving line of the blade.
- Risk of cuts to the hands due to contact with the sharp edge of the blade.
- Risk of injury due to the blade falling after taking apart.
- Risk of strangulation or amputation if loose clothing becomes pulled into drives or the track system.
- Risk of fire due to heating of the engine caused by contamination of the engine cooling system.
- Risk of bruising due to the kick-back effect when starting the engine.
- Irritation of air passages due to breathing in dust produced.
- Risk of hearing loss as a result of not wearing the proper ear plugs or hearing protection during operation.
- Risk of bruising or injury due to kick-back in the event of the blade hitting an obstacle.
- Nervous or rheumatic disorders due to operating the machine for long periods without taking breaks.
- Risk of bruising to hands due to squashing between casing and blade holder due to springing up after releasing from work position.
- Risk of injury due to projection when releasing tension springs or pressure springs.
- Physical injury can occur when traversing a terrain that cannot support the weight of the machine and the operator.
- Risk of intoxication due to intake of fuel, oil or lubricants.
- Risk of burns or skin irritation due to contact with fuel, oil or lubricants.
- Risk of injury, skin perforation or blindness due to contact with high-pressure oil jet in the event of a leak in the hydraulic circuit.

16. Warranty conditions

Dear Customer,

We thank you for purchasing an ELIET product. Congratulations on your purchase of this machine which is sure to exceed your expectations and needs over the coming years. At ELIET, we do everything to ensure that our products function properly. That is why your product comes with a two-year warranty.

What is a warranty?

At ELIET, the design and production of our products are subject to strict quality rules. The purpose of these rules is to guarantee a long service life and permanent safety. That is why ELIET is happy to repair any hidden defects or faults during the whole run-in period (i.e. the warranty period) free of charge, provided the prescribed procedure is followed.

Warranty conditions

ELIET's warranty obligations for new machines are governed by the following conditions.

I. Warranty period

The warranty period starts the day the dealer delivers the machine to the customer (maximum one week after the purchase) and expires:

- After two years for private use.
- After twelve months or 100 hours of operation for rental use.
- After twelve months or 100 hours of operation for semi-professional and/or professional use.

To apply for this warranty the customer must register the purchased product with ELIET and complete the registration details on the website:
www.eliet.eu. If you do not have access to the internet, please complete the attached registration card and return it to ELIET.

II. The warranty does not apply in the following cases.

- Parts that are subject to wear and tear (e.g. blades, bearings, belts, chains, cogs, tyres, bulbs, fuses, etc.) are not covered by the warranty conditions.
- Defects caused by improper use, neglect or consequential damage by an external source (fall, chippings, foreign objects, accident).
- Defects caused by improper maintenance of the machine, i.e. contrary to the prescribed periodic maintenance.
- Defects caused by improper repairs carried out by parties other than authorised ELIET dealers or after using non-original ELIET replacement parts.
- Defects caused by making improper changes to the original design of the machine.
- Faults occurring as a result of machine use contrary to the instructions contained in this manual.
- Failure to observe the prescribed warranty procedure or expiry of the warranty period.

- For all problems relating to the engine, please contact an authorised service centre of the engine manufacturer.

III. Procedure

- **Step 1:** On the date of purchase, the customer registers his/her purchase online by completing the registration card on **www.eliet.eu**. In addition, the enclosed registration card must be completed on the day of purchase. The first part of the card has to be returned to ELIET within one month. The customer is required to keep all remaining parts of the card along with the purchase invoice for the duration of the warranty period.
- **Step 2:** In the event of a defect, the customer must have it verified by the authorised ELIET dealer. If the dealer finds a manufacturing defect, they may invoke the warranty under the terms specified.
- **Step 3:** Every warranty application must be accompanied by a completed official application form. Dealers may request application forms from ELIET or from an ELIET importer/agent.
- **Step 4:** The dealer orders the parts necessary to perform the repairs. Next, the dealer faxes the order form together with the completed warranty form and a copy of the registration card to ELIET.
- **Step 5:** The warranty form must be stapled to the purchase invoice and sent to ELIET or an ELIET importer/agent.
- **Step 6:** ELIET sends the parts ordered to the dealer under the regular delivery and payment conditions.
- **Step 7:** The defective part will be examined by ELIET's technical department prior to approving or rejecting the warranty. ELIET reserves the right to unilaterally decide whether or not the customer has complied with all the conditions applicable to the one or two-year warranty. Faulty components automatically become the property of ELIET.
- **Step 8:** If a warranty claim is found to be valid, ELIET will credit the parts under warranty. Customers are never entitled to a refund of labour costs.

IV. In the event of damage caused by transport:

- All goods are supplied ex works. Transport risks shall be borne by the customer. ELIET therefore recommends checking the goods for damage on delivery.
- Any damage found must be detailed on the delivery form before signing. Make sure the driver of the transport company puts his signature next to the details about the damage on your copy.
- In the absence of a written and signed statement on the delivery form, the transport insurance company will not accept any liability.
- Claims for damages must be submitted to the carrier and shall include a copy of the delivery form and a covering letter detailing your complaint.
- The damaged machine should be kept in its original condition until the carrier's insurer has performed an examination.

English

BZ 201 440 003