ELIET®

MANUAL

Megaprof On Road



This booklet contains information for proper use and maintenance of the machine. **Read it carefully and store it in a safe place.**



Please retain your **sales invoice or receipt copy** along with this booklet.



Register your purchase online at **www.eliet.eu**

© ELIET
Copyright 2018 ELIET. All Rights Reserved. The texts, images, graphics... in this ELIET booklet are all subject to Copyright and other intellectual property protection. These objects may not be copied for commercial use or distribution, nor may these objects be modified or reposted for other use. Some parts this ELIET manual also contain material that is subject to the copyright rights of their providers.

1. Introduction



1.1 Please read the manual

Eliet machines are designed for safe and reliable use if they are operated in accordance with the instructions given. Carefully read these operating instructions before using the machine. Failure to observe this may result in personal injury or damage to the equipment.

1.2 Identification data – ELIET Megaprof On Road

Note the identification data relating to your machine in the boxed areas

Stock number :	
Serial number :	
Year of Manufacture :	
Engine :	

2. Warranty



2.1 Registration of your machine

In order to be able to make a warranty claim, you will need to register your machine online within one month after purchase: **www.eliet.eu / www.elietmachines.com**

European customers :
ELIET EUROPE NV
Diesveldstraat 2
8553 Otegem
T (+32)(0)56 77 70 88 - **F** (+32)(0)56 77 52 13
E-mail: service@eliet.eu, www.eliet.eu

US customers :
ELIET USA Inc.
3361 Stafford street (office B)
15204 Pittsburgh (PA)
Ph (+001) 412 367 5185 - **Fax** (+001)412 774 1970
e-mail: usinfo@elietusa.com, www.elietmachines.com

Read the warranty conditions "Read §16. Warranty-conditions" on page 107"

3. Welcome



Welcome to the family of ELIET customers.

We would like to thank you for the confidence that you have placed in ELIET and we are convinced that you have purchased the very best machine. The operating life of your ELIET machine depends to a great extent on how you care for your machine. This user manual and the engine manual provided will assist you in this respect. If you follow the instructions and suggestions in these manuals, your ELIET machine will operate for a very long time in optimal condition.
Read this instruction manual carefully before operating this machine. This will prevent you from operating the device incorrectly.
For your own safety, take into account the safety instructions stated in the relevant chapter. Even if you are thoroughly familiar with operating such equipment, it is still advisable to read these pages carefully.
At ELIET all our machines and devices are subjected to a policy of continuous change and therefore, the specification of your machine may differ slightly in terms of shape, technology and accessories. The descriptions and technical data in this manual are accurate at the time of printing. Certain illustrations and descriptions may not be applicable to your specific machine, but instead relate to a different version of the machine. In turn, we trust that you will understand that the texts and illustrations in this manual cannot lead to any claims.
If you still have any questions after you have read this manual, we request you to contact your ELIET dealer.

ELIET AT YOUR SERVICE

ELIET®

European customers GMT +1: 8 - 12 u en van 13 - 17 u

Zwevegemstraat 136
B-8553 Otegem
België

Tel : (+32) (0)56 77 70 88
Fax : (+32) (0)56 77 52 13
Email: service@eliet.be

4. Warning

OPERATING OUTDOOR POWER EQUIPMENT

Under the laws of several countries or states you are not permitted to operate an internal combustion engine using hydrocarbon fuels on any forest covered, brush covered or grass covered land or on land covered with grain hay or other flammable agricultural crop, without an engine spark arrester in continuous effective working order.

The engine on your power equipment, like most outdoor power equipment, is an internal combustion engine that burns gasoline, a hydrocarbon fuel.
Therefore, your power equipment must be equipped with a spark arrester muffler in continuous effective working order. The spark arrester must be attached to the engine exhaust system in such a manner that flames or heat from the system will not ignite flammable material.. **The muffler of this machine is not standard equipped with a spark arrester muffler**

Failure of the owner/operator of the equipment to comply with this regulation is a misdemeanour under certain law (e.g. Californian Law), and may also be a violation of other state and or federal regulations, laws, ordinances, or codes. Contact your local fire marshal or forest service for specific information about what regulations apply in your area.

The standard muffler installed on the ELIET engines is not equipped with a spark arrester.
One must be added before use if this machine is intended to be used in an area where a spark arrester is required by law. Contact the local authorities if these laws apply to you. See your authorized engine dealer for spark arrester options.

ELIET AT YOUR SERVICE

ELIET®

European customers :
ELIET EUROPE NV
Diesveldstraat 2
8553 Otegem
T (+32)(0)56 77 70 88 - **F** (+32)(0)56 77 52 13
E-mail: service@eliet.eu, www.eliet.eu

US customers :
ELIET USA Inc.
3361 Stafford street (office B)
15204 Pittsburgh (PA)
Ph (+001) 412 367 5185 - **Fax** (+001)412 774 1970
e-mail: usinfo@elietusa.com, www.elietmachines.com

5. Table of Contents

1. Introduction 4
1.1 Please read the manual 4
1.2 Identification data – ELIET Megaprof On Road 4
2. Warranty 4
2.1 Registration of your machine 4
3. Welcome 5
ELIET AT YOUR SERVICE 5
4. Warning 6
ELIET AT YOUR SERVICE 6
5. Table of Contents 7
6. Safety symbols 10
6.1 For you information : 10
6.2 Caution 10
6.3 Warning 10
7. Main parts 11
7.1 General 11
7.2 Engine 13
7.3 Danger zone 15
8. Safety regulations 16
8.1 Safety messages 16
8.2 Safety provisions 22
8.3 Safety instruction 25
8.3.1 General safety precautions 25
8.3.2 Careful and security-conscious use 26
8.3.3 Responsible transportation and parking 27
8.3.4 Responsibilities of the Operator 28
8.3.5 Personal Protective Equipment 28
8.3.6 Periodic maintenance 29
8.3.7 Limits of the machine 29
8.3.8 Preserving Nature 30
9. Dealer duties 31
10. Operating instructions 33
10.1 Preliminary checks 33
10.2 Filling up with fuel 35
10.3 Preparing the work area 36
10.4 Turning and positioning the blow chute and deflector-flap 37
10.4.1. Folding the discharge chute in and out 37
10.4.2 Turning the blow chute 38
10.4.3 Adjusting the deflectors 39
10.5 Starting and stopping the engine 40
10.5.1 Starting the engine 40
10.5.2 Turning off the engine 42
10.6 Operating the machine 43
10.6.1 Before starting work 43
10.6.2 Switching on the work lights 43
10.6.3 Activating and de-activating the Eco-Eye™ system 44
10.6.4 The shredding itself 45
10.6.4.1 Operating the feed roller 46
10.6.4.2 In case of clogging 48
10.6.4.3 Tips for proper use 51
10.6.4.4 What to do in case of a blockage 52
10.7 Transporting the machine 54
11. Maintenance 56
11.1 General 56
11.2 Maintenance schedule 57
11.2.1 Special maintenance 57
11.2.2 Periodic maintenance 59
11.2.3 Maintenance management 60
11.3. Cleaning the machine 61
11.4 General interventions 63
11.4.1 Opening the protective covers 63
11.4.2 Removing the ventilation grilles 65
11.4.3 Disconnecting the battery 65
11.4.4 Opening the Axelero™ chamber 66
11.4.5 Opening the shredding chamber 68
11.4.6 Lifting the in feed roller manually 70
11.5 Engine maintenance 73
11.5.1 Checking the oil level in the engine crankcase 73
11.5.2 Topping up the engine oil 74
11.5.3 Changing engine oil 75
11.5.4 Renewing the oil filter 76
11.5.5 Cleaning the air filter 77
11.5.6 Renewing the air filter 78
11.5.7 Emptying the water separator (only for Kubota diesel version) 78
11.5.8 Renewing the fuel filters 79
11.5.9 Topping up the cooling liquid (only for water cooled diesel engine) 80
11.5.10 Cleaning and lubricating the throttle cables 81
11.6 Machine maintenance 83
11.6.1 Routine check of the blades 83
11.6.2 Sharpening the blades 84
11.6.3 Reversing and renewing the blades 86
11.6.3.1 To reverse a shredding blade, proceed as follows 86
11.6.3.2 To replace the shredding blades, proceed as follows:.. 89
11.6.4 Checking the tension of the blade shaft drive belt. 90
11.6.5 Tighten the blade shaft drive belt 90
11.6.6 Checking the tension of the Axelero™ drive belt 92

11.6.7 Tensioning the belt of the Axelero™ 92
11.6.8 Replacing the supporting roller and the bearings for the tensioning roller of the rotor belt drive 93
11.6.9 Replacing the bearings for the tensioning roller of the Axelero™ belt drive 95
10.6.10 Renewing the hydraulic oil 96
11.6.11 Renewing the hydraulic oil filter 97
11.7 General lubrication 98
11.7.1 Pivot points and friction surfaces 98
11.7.2 Greasing via the grease zerks fitted 99
11.7.3 Lubricating the bearings 99
12. Winterizing the machine 100
13. Equipment specifications 101
14. Appendix 102
14.1 Technical specifications of the lubricants and oil 102
14.3 List of torques 103
14.4 Dashboard notifications 104
14.4.1 Alarm notifications 104
14.4.2 Dashboard warnings 105
15. Hazard analysis 106
16. Warranty-conditions 107
What is warranty ? 107
Warranty conditions 107
17. EC Declaration of Conformity 109

6. Safety symbols



Certain symbols in this manual are used to provide additional information and to draw your attention to potential risks.

6.1 For you information :



For you information :
This symbol is used to draw your attention to specific information and/or actions, or to denote where you can find additional information relating to the subject.

6.2 Caution



Caution :
This notice identifies safe usage habits. This is done to prevent incorrect actions that can result in personal injury or damage to the machine.

6.3 Warning



Warning :
This notice is used to warn you about extreme danger that you must be aware of in these specific circumstances. Thus remain alert, in order to ensure your own safety.

7. Main parts

7.1 General

To fully understand the content of this operator's manual, you need to be fully conversant with the terminology used for the descriptions. In this chapter you can find a set of parts identified by name. It is a good idea to take time to study the machine beforehand for an improved understanding of the descriptions provided in this user manual.

Machine:

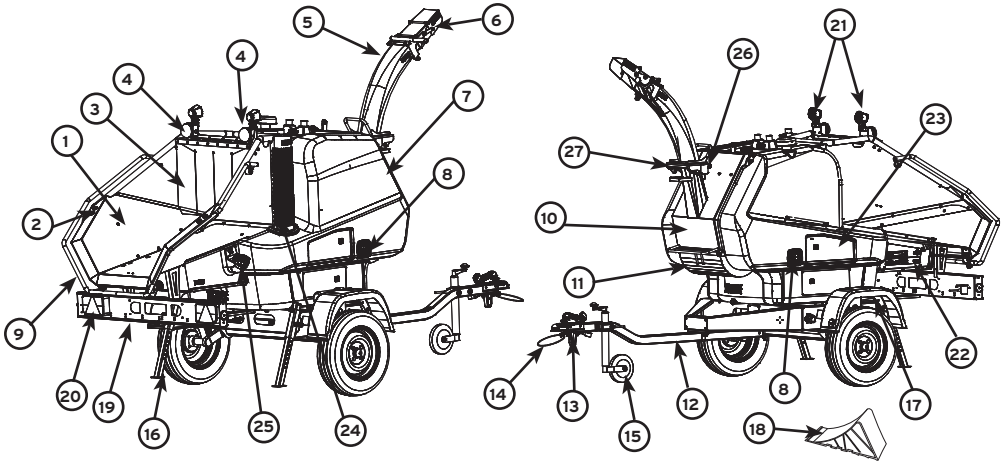

1. Loading hopper
2. Controls feed roller
3. Safety screen
4. Top feed stop (TFS)
5. Blow chute
6. Deflector cap
7. Protection cap
8. Door handle
9. Safety-stop-bracket
10. Maintenance hatch
11. Axelero™ chamber
12. Shaft
13. Towing hook
14. Safety cable
15. Nose wheel
16. Telescopic support
17. Fender
18. Park wedge
19. License plate holder and rear light carrier
20. Traffic lighting
21. Work lights
22. Dashboard
23. Air grate
24. Muffler
25. Fuel Filler cap
26. Safety lock point of rotation of blow Chute
27. Pivot point of blow chute

Shredding components:

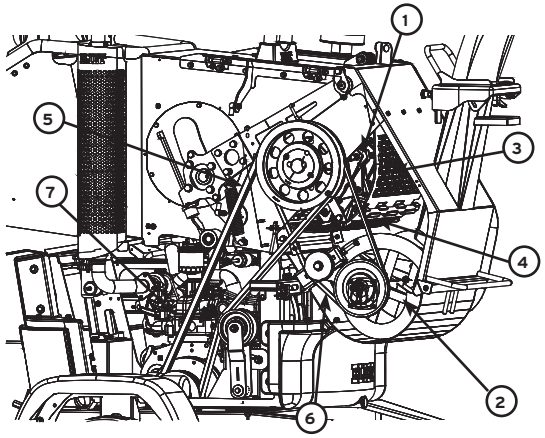

1. Blade axle/Rotor
2. Axelero™ impeller
3. Upper part of the sieve
4. Lower part of the sieve
5. Belt drive blade axle
6. Belt drive Axelero™
7. Engine

Dashboard:

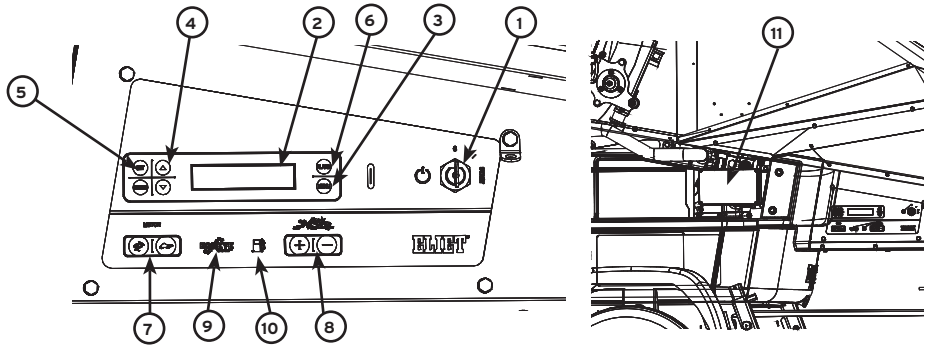

1. Ignition key
2. LCD control screen
3. Menu button
4. Scroll buttons
5. SET/RESET buttons
6. Alarm diagnosis button
7. Throttle control
8. Feeding speed control
9. Eco Eye sign
10. Low fuel level alarm
11. Fuse and relay box

7.2 Engine

Diesel engine

Kubota D1105-T

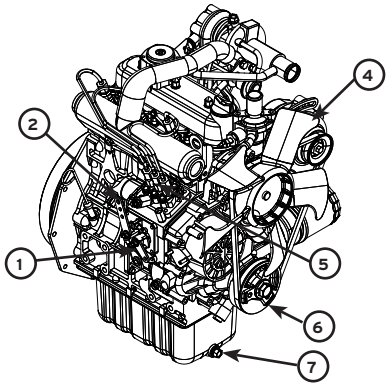

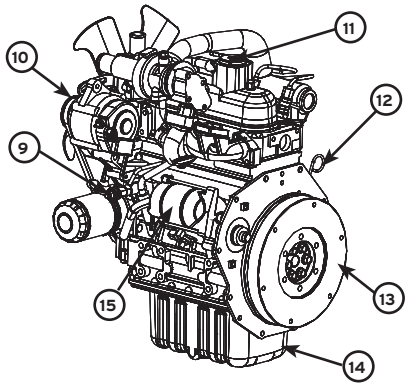

1. Stop lever engine
2. Speed controller
3. Air scoop
4. Fan blade
5. Injection pump
6. Pulley fan drive
7. Oil drain plug
8. Oil filter
9. Oil pressure sensor
10. Alternator
11. Oil filler cap
12. Oil dipstick
13. Flywheel
14. Oil pan
15. Starter motor
16. Water separator
17. Diesel filter
18. Exhaust pipe
19. Air filter
20. Air cleaning valve
21. Coolant Tank
22. Cooler

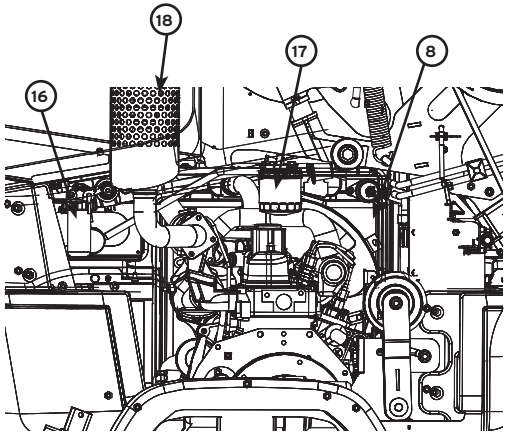

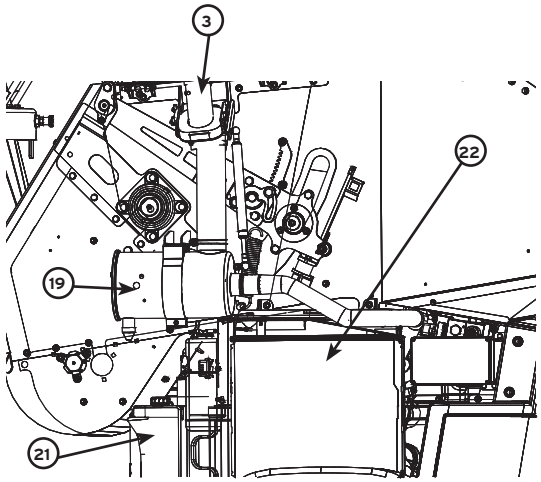

Petrol engine

Vangaurd 37HP Petrol

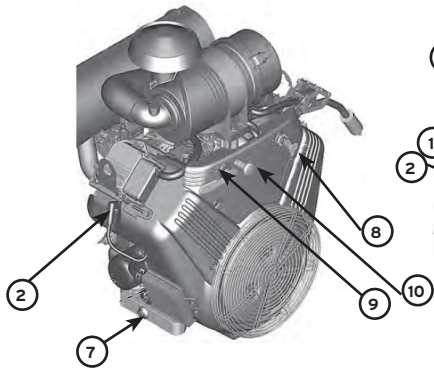

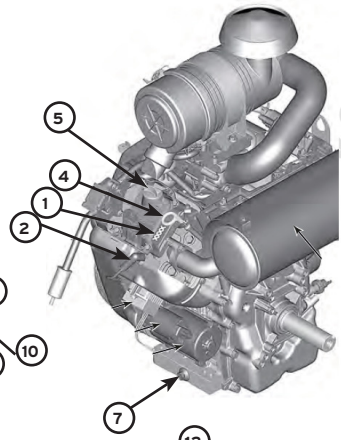

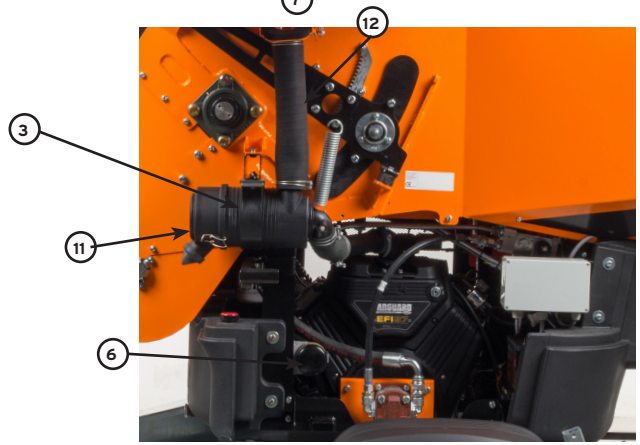

1. Identification number engine
2. Spark plug (2x)
3. Air filter, cyclone
4. Oil dipstick
5. Oil filler cap
6. Oil filter
7. Oil drain plug
8. Starter motor
9. Gas lever
10. Choke control
11. Air cleaning valve
12. Air intake opening

7.3 Danger zone



For you information :
References in this manual to the right- or left-hand side, back or front, are viewed from the machine operator facing the branch feed.

Representation of the danger zone:

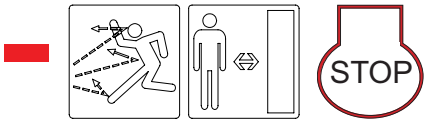

- During the work, do not allow bystanders to enter the zone of danger that stretches up to 10m / 40ft around the machine.
- Do not take any risks and immediately stop the machine as soon as anyone enters the danger area. When leaving the machine, the engine must be switched off.

- Once the engine is running, focus all your attention on operating the machine.

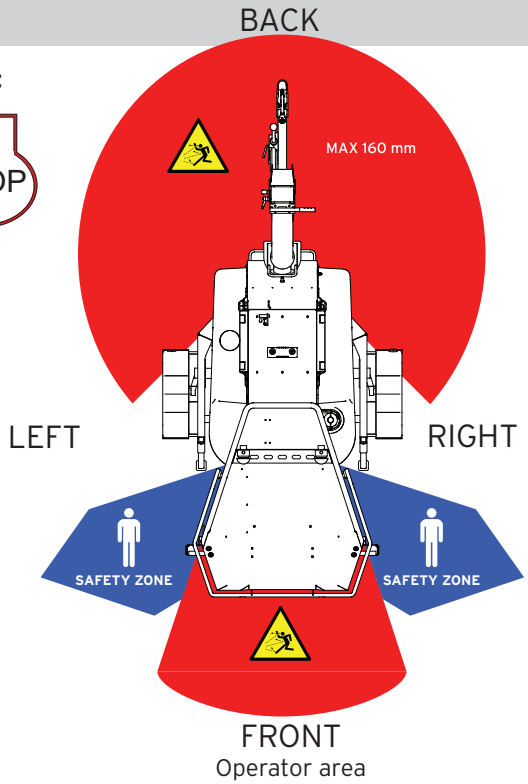

Visit your authorised ELIET dealer regularly!

Your ELIET dealer is at your service, ready to provide you with maintenance or advice so that your ELIET machine always remains in optimal condition. You can contact him for genuine ELIET service parts and lubricants. These service parts are manufactured to the same stringent accuracy requirements and standard of craftsmanship as the original equipment.



Caution:
For your safety, use only genuine ELIET parts on ELIET machines

8. Safety regulations





8.1 Safety messages

This sticker is attached to the feed opening. It explicitly draws attention to the following hazards::



1. Hazard of cutting hands and upper limbs.
2. There is a real risk of flying debris. Persons standing within the projection range may be injured this way.
3. The feeder parts present a real risk to the operator and bystanders of being pulled into the machine.

(Article number: BQ 501 044 110)



Caution:
Avoid risks and stay away from dangerous areas if necessary. Keep bystanders at a safe distance of 10m / 40ft.



Caution:
Never reach past the anti-projection shield with your hands or feet.



This sticker is attached to the sides on the inside of the feed hopper. It reminds you of the following prohibition:

It is strictly prohibited to enter the feed opening or lean into the feed hopper. It is prohibited to reach into the feed hopper with your feet.
(Article number : BQ 501 044 090)



Warning :
Stepping into the feed hopper may result in serious injury and possibly death.

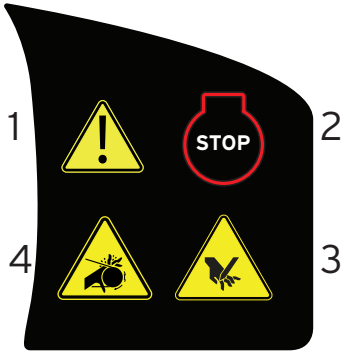

This sticker is attached next to the handle on each protective cover. It reminds you of the following hazards and obligation when opening the protective covers:

1. The hazard triangle draws attention to the existence of a hazard. When the protective covers are opened, moving parts are exposed. So be alert and attentive when carrying out maintenance or other actions in this area.
2. To avoid the risk of injury by moving parts, it is important to turn off the engine before opening the protective covers, to stop the drive. Remove the key from the ignition as a precaution.
3. When the protective covers are opened, there is a possibility of contact with rotating or sharp parts, and hence an increased risk of cuts. Take the necessary precautions.
4. When the protective covers are opened, the drive is exposed, leading to a risk of limbs being crushed or amputated. Be alert and keep a safe distance.

(Article number: BQ 501 044 050)



Caution:
Wear the necessary protective clothing when carrying out maintenance behind the protective covers.

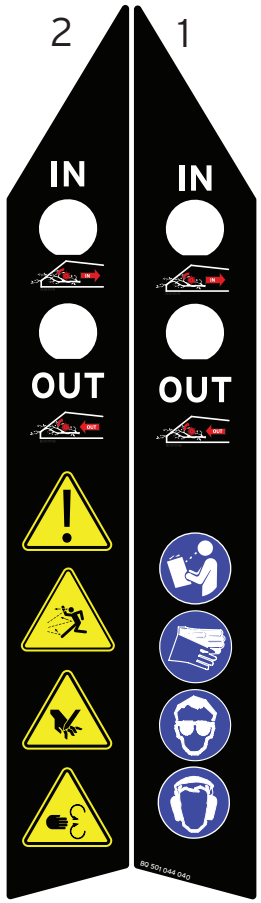

This sticker (1) is attached to the right-hand side of the feed opening near the control buttons; it contains a number of rules to be observed when working with the machine.

1. It is mandatory to read the user manual before working with the machine.
2. Wear sturdy gloves to protect your hands from cuts.
3. Wear safety glasses to shield your eyes from flying debris or moving branches
4. Wear hearing protection to reduce the noise level.

(Article number : BQ 501 044 040)



Caution:
Make bystanders wear this protective gear as well.

This sticker (2) is attached to the left-hand side of the feed opening near the control buttons; it draws attention to a number of risks involved in working with the machine :

1. There are some risks involved in working with a shredder, so be extremely attentive and careful.
2. There is a great hazard of injury due to flying debris.
3. Working with the machine poses a risk of cuts to hands and feet.
4. There is a risk of being pulled into the feeder parts. Hands or limbs can get stuck and be pulled into the shredder.

(Article number : BQ 501 044 030)



Warning :
Working with the chipper holds danger for serious injury or death. Follow the safety instructions and wear the correct protective equipment.

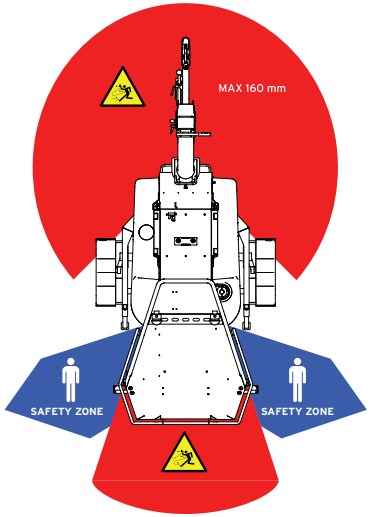

This sticker is attached to the left-hand side of the hopper near the control panel. Every time the machine is started, a number of important areas around the machine must be inspected:

- These are the areas where the operator stands during work with the machine. This area is outside the immediate projection range of flying debris and outside the range of movement of branches that are fed into the machine. The control elements for the feeding process are within reach
- These are the areas where there is a risk of injury due to flying debris. These areas must be kept clear at all times during the work.

The sticker reminds the operator of the maximum diameter of the material that can be shredded using the machine.
The sticker draws attention to the fact that bystanders must keep a safe distance of 10m / 40ft from the machine.. (Article number: BQ 501 044 070)

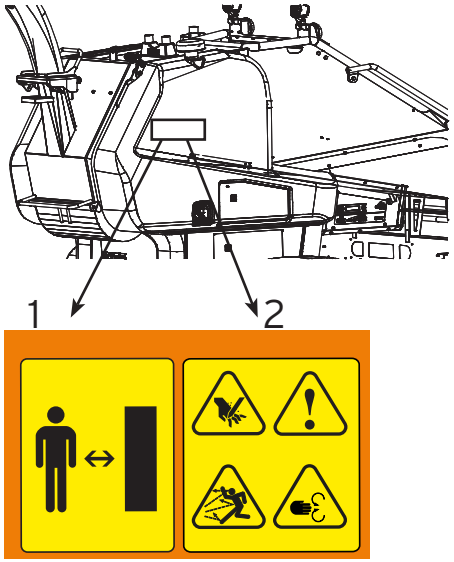

These icons are shown on the left-hand protective cover of the machine. They provide information about the hazards. They point out the obligations during shredding and maintenance work:

1. This picture points out that bystanders must keep a safe distance from the machine (10m / 40ft)
2. These icons draw attention to the hazards during shredding:
   There is a hazard of cutting hands and limbs..
   There is a hazard of injury due to projection and flying debris..
   There is a hazard of being pulled into the machine and suffering serious injuries. .
   Therefore, the shredder must always be used with one's full attention and with the necessary care.
3. These symbols are intended to remind the operator to always turn off the engine before carrying out any kind of maintenance.

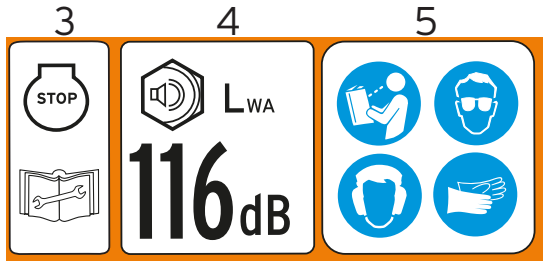

4. This label represents the guaranteed sound power levels (LWA) produced by the machine under normal operating circumstances.
5. These symbols remind the operator to read and study the user manual before use. Suitable safety clothing (gloves, glasses, hearing protection) must be worn when operating the machine.

(Article number: BQ 501 044 010)

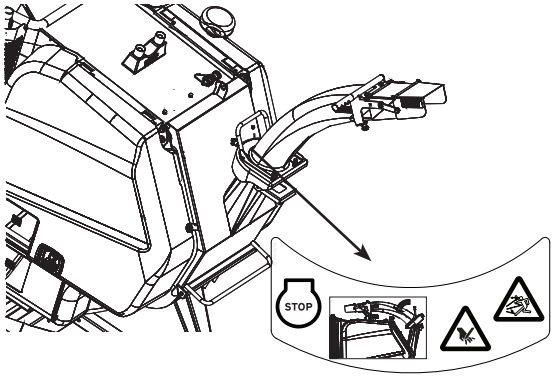

The blow chute can be folded over in order to make the unit smaller for transport. This sticker, on the blow chute, refers the user to the fact that bending the blow chute corresponds to a risk of fingers becoming jammed or cut. Th sticker also refers to disengaging the engine before bending the blow chute. Never put your hands into the folded-out blow chute.
(Article number: BQ 501 044 100)

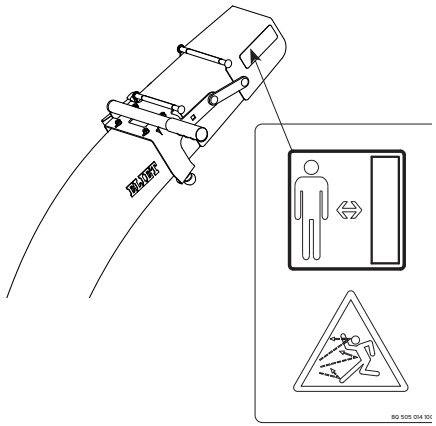

This sticker, on the blow chute flap, refers the user to the risk of flying chippings. Maintain a safe distance from the projection zone of the blow chute when the machine is being operated. .
(Article number BQ 505 014 100)

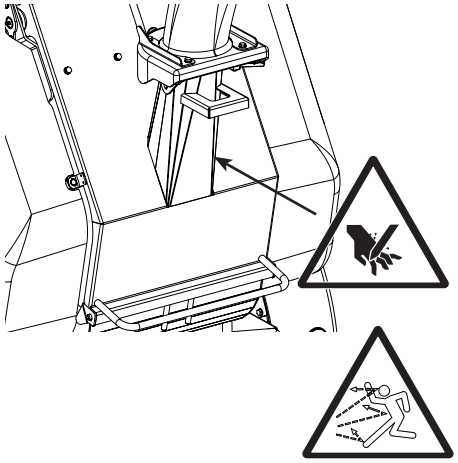

This sticker, placed above the shredder chamber, warns the user about the hazard of flying chippings and the danger of being cut by the blades when opening the maintenance hatch that provides access to the Axelero™ and blade system.
(Article number BQ 501 070 140)



This sticker is attached above the shredder chamber. It reminds the user to check the tension of the blade bolts within the first 5 hours of use after replacing or turning the blades.
(Article number: BQ 501 010 160)



This sticker is attached under the protective cover.. It lists all the identification data relating to the machine: Model, model number, serial number, year of manufacture, engine, power rating, weight, guaranteed A-weighted sound power level Lw(A)..
This sticker also lists the manufacturer's details. The CE label means that the machine complies with the governing European machinery directive.



Caution:
Safety stickers becoming damaged, illegible or removed through use or cleaning, must be immediately renewed. Stickers are available at your approved ELIET Dealer.

8.2 Safety provisions

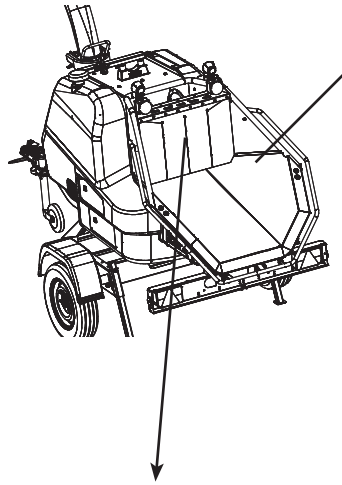

Safe and ergonomic feed height:
The feed hopper is not only designed for optimal feeding of garden waste; it also has properties that improve safety and ergonomics:
1. Ergonomic feed height: the feed height is sufficiently low to minimise the user's effort during the feeding process. However, it is also sufficiently high to create a safety barrier.
2. Thanks to the sloping side of the hopper, less effort is needed to feed a large branch up to the feed roller. Furthermore, the slope ensures that in an emergency situation one will always move away from the danger.

Safety curtain:
The transparent plastic curtain protects the operator's face from flying debris. As the curtain is transparent, it does not limit the operator's view of the feed roller.



Caution:
When parts of the curtain break off, these must always be replaced immediately..

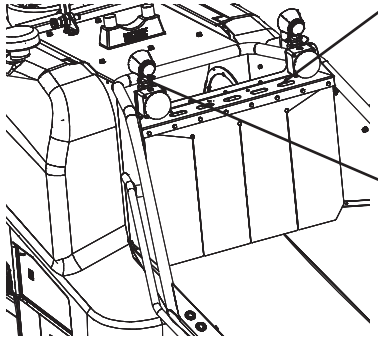

Safety curtain holder :
This holder acts as an extra safety barrier as it provides the operator with a structural element he can use to push himself away from the danger zone in an emergency situation.

Work lights:
By default, the shredder is equipped with work lights. These can also be used for extra light in the feed area in case of limited visibility. In the same way, the projection area for the discharge can be lit. This increases safety.

Sturdy construction:
The feed hopper consists of a single welded part, without hinged parts. This means that the safe distance to the danger zone is always guaranteed by this sturdy structure, which is resistant to wear.

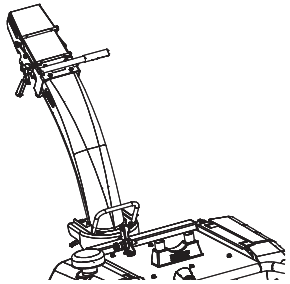

Discharge chute :
The turning radius of the discharge chute is limited, so the projection of debris cannot enter the safe operator area. The deflectors ensure an optimal, contained flow of debris in order to reduce the risk of flying debris.

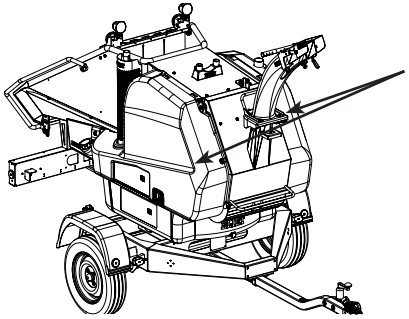

Protective covers:
These two protective covers shield the hazards of all rotating drive parts as well as hot engine parts. There is a safety switch that turns the engine off when these covers are opened. The protective covers also have a noise-reducing effect in order to reduce noise nuisance for unprotected bystanders.

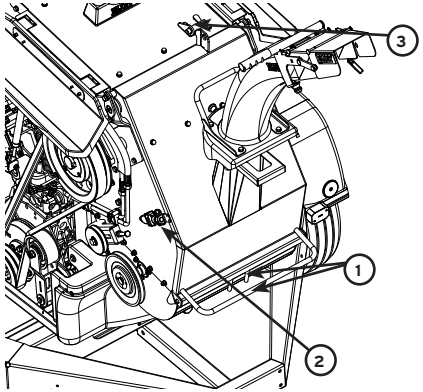

Maintenance hatch safety lock:
The maintenance hatch protects the access to the blades and the Axelero™ discharge system. The hatch is equipped with a mechanism that must be operated with two hands (1) to open it. As soon as the hatch is released from its locked position, a safety switch (2) will immediately turn the engine off to make the moving parts stop. To ensure that an open safety hatch does not close accidentally during maintenance, a locking lever (3) is provided to secure it in its open position.

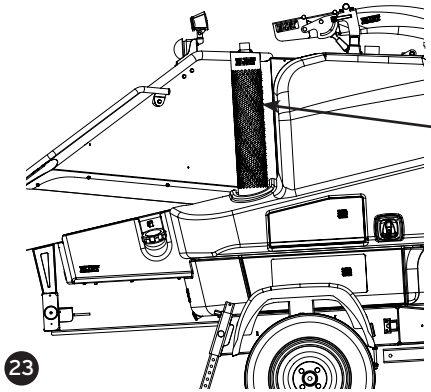

Exhaust shield:
To prevent accidental contact with the hot surface of the exhaust pipe, a shield has been fitted around the exhaust with an insulated air gap to let the air escape from the exhaust. This reduces the risk of burns.

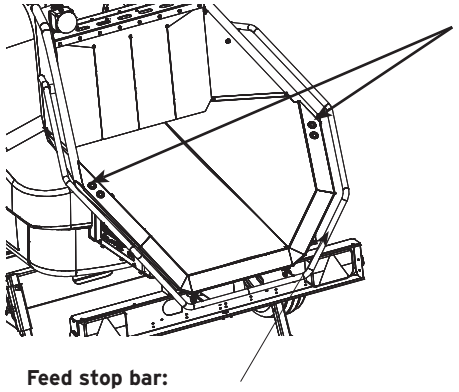

Control buttons for the feeding system:
The control buttons (feeding and reverse feeding) are located in the most accessible place at either side of the feed opening. The buttons are impact-proof and waterproof. The buttons are also equipped with integrated LED lights to allow you to see at all times when a button has been activated and hence when the feed roller is in operation. The buttons also remain clearly visible in the dark.

Feed stop bar:
This bar is placed around a large part of the feed hopper, allowing you to activate it even without using your hands. When you push down the bar, the feeding process will be stopped immediately. It can then only be reactivated after the bar has been replaced in its neutral position.

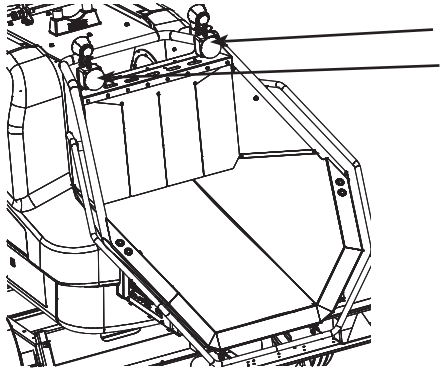

Top Feed Stop: (TFS):
On top of the structure onto which the anti-projection curtain is attached, two feed stop push buttons have been fitted as well. When these buttons are pushed, the feed roller is deactivated immediately. The buttons can be reached by an operator or bystander from a safe area at either side of the machine. In an emergency situation the operating button can also be activated from the feed hopper. To reactivate the feed roller, one must first replace the emergency buttons in their neutral position and then enter the command using the operating buttons.

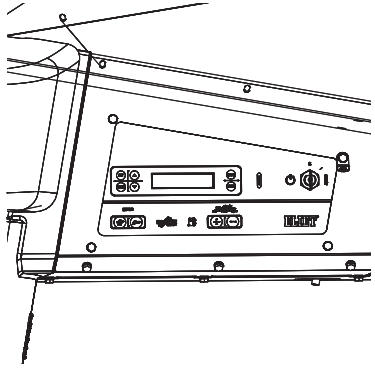

Instrument panel:
The instrument panel will notify the operator of incorrect actions via the LCD display. An error diagnosis will be made as well to allow the operator or maintenance mechanic to take the correct action right away.



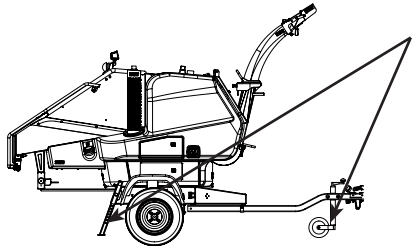

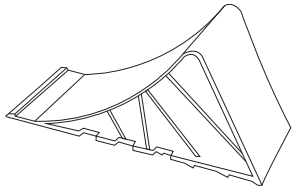

Eco Eye™:
This shredder comes equipped with an Eco Eye™ system. This system ensures that at passive moments the noise level of the machine is reduced, thus reducing noise nuisance for both operators and unprotected bystanders.

Safety wear:
For your safety, we strongly recommend to use the safety kit supplied as standard. It contains your Personal Protective Equipment (PPE). This safety set consists of safety glasses, ear defenders and a pair of riggers gloves.

Support leg and nose wheel:
In order to guarantee the stability of the machine and the safety of the user when the shredder is disconnected from the vehicle, the machine is equipped with two adjustable support legs. In combination with the nose wheel, the support points of the machine can be adjusted to ensure a stable set-up in any situation.

Parking wedge:
The machine comes with two parking wedges. To ensure that a disconnected machine does not move when parked on a slope, this safety mechanism is always available.

8.3 Safety instruction

8.3.1 General safety precautions

- The Owner Manual must stay with the unit during its complete service life. It serves as a reference for the user, and enables the machine to be used and maintained in accordance with the correct instructions. Always refer to this instruction manual if you have any doubts about an action that you are about to perform
- If the instructions stated in this manual are not clear to you, do not hesitate to contact your Eliet dealer for further explanation. ELIET's helpdesk (+32 (0)56 777088) is also at your disposal during office hours to provide answers for your questions..
- Read the chapter that is meant for the dealer ("Read §9. Dealer duties" on page 31") and immediately check whether or not the machine has been delivered in accordance with the instructions.
- Carefully observe all safety instructions when using the ELIET machine ! Carefully read all the instructions relating to the use of the machine. All these instructions relate to your personal safety.
- Upon purchasing the machine, allow the dealer or a professional to give you ample instructions about its proper use.
- Ask your ELIET dealer to explain the possible dangers associated with the machine.
- Read and observe all safety messages posted on the machine in the form of stickers or icons.
- Under no conditions whatsoever may the original design of the machine be modified without the explicit and written consent from ELIET.
- Under no circumstances must a safety item be shunted, disassembled or switched off.
- As shredding involves ongoing considerable physical effort, take regular breaks for food intake, rest and drinking.
- It is unsafe for persons suffering heart problems and/or having balance disturbances to operate the machine.
- Avoid inhaling the exhaust fumes from the machine. Exhaust fumes contain toxins, which can lead to lung problems, illness, poisoning and result in death. Never start the engine in an enclosed area.

8.3.2 Careful and security-conscious use

- Think about what you are doing whenever you operate the machine. Do not be tempted to let routine dull your attention. Never act impulsively or in reflex.
- Despite the extensive safety features, do not seek out dangerous situations.
- This machine is designed solely for chipping branches, pruning, leaves and all kinds of organic garden debris and shall be used for this purpose only.
- Never attempt to shred frozen branches.
- Take care to preclude any tools falling into the in-feed funnel.
- Do not feed foreign materials. (String, stones, metal, plastic, textile, etc.)
- Do not constantly feed the maximum branch diameter of 150mm / 5.9055 inch. As a guideline: no more than 10 % of the garden waste that is to be fed into the machine may have a diameter in excess of 120mm / 4.7244 inch.
- Never stand on a step when feeding garden waste into the loading hopper
- Never work in conditions where light intensity is less than 500 Lux. In such case, switch on the work lights. Optionally, additional work lights can be fitted. (Art. nr: MA 018 001 006)
- Do not use a fork or a shovel to or a fork to feed the machine with garden waste
- Do not use your feet to feed garden waste in the loading hopper.
- For deontological reasons, ELIET accept no responsibility whatsoever for any accidental injury to pets or persons caused by its machines.

8.3.3 Responsible transportation and parking

- The machine on its trailer has a total weight below 750 kg / 1653lb 7.5oz. A simple category B driving licence suffices to tow the trailer. Only persons with a driving licence may transport the machine.
- Persons who do not have any experience towing a trailer must get used to its effect on the vehicle's behaviour on private premises.
- Before setting off with the trailer, one must first inspect the machine to ensure that it is ready for transport. ("Read §10.7 Transporting the machine" on page 54")
- The trailer must always be connected to the vehicle's power supply and one must always ensure that the vehicle's lights work properly.
- The connection with the towing vehicle must be additionally secured with an approved cable or chain.
- The machine must be fitted with a number plate that complies with the applicable national legislation.
- The applicable traffic regulations must always be respected, both for driving and for parking the machine.
- When driving with the trailer, a maximum speed of 90 km/h - 55mi/h applies
- The weight on the trailer hitch is 75 kg / 165lb 5.5oz. To lift the tow bar to attach the machine to the trailer hitch, one must use the screw jack of the support wheel.
- The machine has an axle track of 152 cm / 59 $^{27/32}$ in.
- The trailer has been specifically designed for the shredder; the two form a whole. It is forbidden to transport other objects on the trailer.
- If the towing vehicle is wider than the trailer, it may be useful to mount widening reflectors to have a better view of the trailer's movements when driving in reverse
- The trailer may only be disconnected when it is on flat ground.
- To disconnect the trailer, first the provided wheel wedges must be placed so that the trailer cannot roll off by accident.
- The support legs must always be extended and secured in their position to ensure stability.

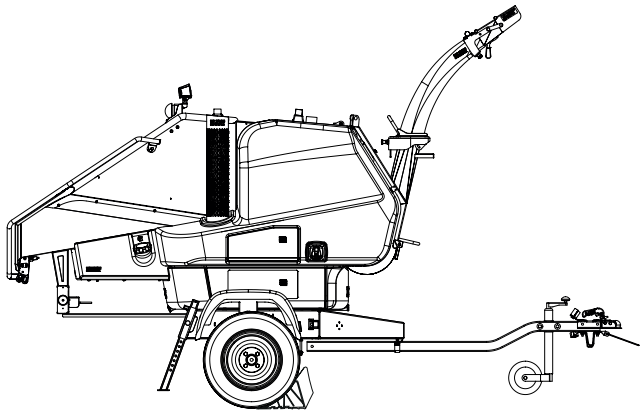

- Before extending the support legs, one must set up the machine so that the bottom of the feed hopper is 60 cm / 23$^{5/8}$ in from the floor, using the height adjustment on the support wheel on the tow bar.
- When setting up the machine, one must ensure that the access routes to the safe operator area are always freely accessible, without any obstacles.

8.3.4 Responsibilities of the Operator

- All persons using the machine are assumed to be fully conversant with the safety instructions. The operator is fully liable for the use of the machine in regard to himself and to third parties.
- Operators are presumed to possess a certain level of maturity that permits them to make decisions based on common sense.
- Underage persons must not operate the machine. However, this does not apply to youths above the age of 16 years, who are learning to operate the machine under the supervision of an experienced operator.
- A disabled person may only operate the machine when under the supervision of an experienced operator.
- Children and animals must be kept well away from the machine.
- ELIET recommend that the machine should not be lent to others. However, if this is done, only lend it to persons who are conversant with the machine.

Always ensure that the user is aware of the potential hazards and ensure that he reads the manual before he uses the machine.

- This machine must only be operated by persons who are in good physical condition. If you become tired during the work, take a rest in due time. Persons consuming alcohol or drugs must not operate this machine.

8.3.5 Personal Protective Equipment

- You must wear suitable clothing to operate this machine. That is, clothing covering the whole body, heavy protective gloves and closed nonslip footwear
- One must always wear sufficiently sturdy gloves. These must be made of a strong material that is shockproof. Make sure the gloves firmly cover your hands and preferably have long sleeves..
- Do not wear loose fitting clothing (a shawl, for instance, should be avoided by all means). Long hair should be contained using a cap or a headband, or worn in a ponytail
- For the protection of the most sensitive senses, ELIET recommends ear defenders and safety goggles.
- Shredding may result in dust production. If this dust irritates your lungs, we recommend that you wear a dust mask conform to directive 89/686/EC.
-
-
-
-

8.3.6 Periodic maintenance

- Periodic maintenance is essential. For this reason, strictly follow the maintenance schedule in this user manual (“Read §11.2 Maintenance schedule” on page 57”).
- Always request genuine ELIET replacement parts from your ELIET dealer when parts require replacement due to wear or failure. This is of key importance for your own safety.
- Always make sure the engine is switched off and the battery cables disconnected before performing repairs or maintenance.
- Only experienced and technically skilled persons may carry out maintenance on the machine. Maintenance carried out inexpertly may damage the machine and put the operator and bystanders at risk. .
- To carry out maintenance work, adequate protective clothing must be worn.
- During maintenance work, no unauthorised persons must come near the machine. This could pose a risk to the maintenance mechanic or the bystanders.



For you information :
Also, read the engine manual that comes supplied with the machine. This contains the information required for the correct use and maintenance of the engine

8.3.7 Limits of the machine

- According to the manufacturer, this model will take branches up to 150 mm / 5.9055 inch diameter. For your own safety on no account should any attempt be made to introduce stems thicker than the stated capacity.
- The machine weighs 748 kg / 1649 lb 0.93 oz. Bear this in mind when transporting the machine
- The height of the feed hopper will be adjusted.
- The machine has a total width of 170 cm / 66 $^{59/64}$ in. The widest point of the machine is the wheels.
- The total length of the machine is 370 cm / 145 $^{43/64}$ in.
- The maximum height when the discharge chute and the deflectors are in their highest position is: 240 cm / 94 $^{31/64}$ in
- The total height with the discharge chute folded down is: 194 cm / 76 $^{3/8}$ in .
- The fuel tank has a maximum capacity of 40 L / 10.57 US gal .

8.3.8 Preserving Nature

- Use the machine in a manner that respects environmental regulations
  a) Avoid unnecessary machine running while not at work.
  b) Avoid spilling gas while refuelling.
  c) Service the engine regularly in order to achieve optimum combustion
  d) When changing oil, the dirty oil must be disposed of in the correct manner, i.e. offered for recycling.

The machine is equipped with an Eco Eye™ system. This will automatically set the rotational speed of the machine to idle as soon as the system detects that the machine is no longer shredding. As soon as an infrared sensor detects movement in the feed area, the machine will assume the operator is back and will automatically increase the rotational speed to the maximum again.
This function allows you to save fuel and reduce emissions from the machine and noise nuisance for the environment. The Eco Eye™ function must preferably be activated.
Lees § “Read §10.6.3 Activating and de-activating the Eco-EyeTM system” on page 44”

9. Dealer duties

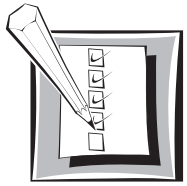



Warning :
As an ELIEt dealer, you must familiarize your customers with the functioning of the machine and also point out the possible dangers while using it. You are expected to carefully go over the maintenance points of the machine together with the new owner. Repeat these instructions until the new owner has fully understood everything.



Warning :
As the manufacturer of the machine, ELIET wishes to re-emphasise that the dealer must expressly point out to the customers the necessity of re-tightening all the blade bolts within the first 5 operating hours.
Failure to do this may cause serious injury and even lead to death. In addition to damaging the machine, it also voids the warranty.

- ELIET machines are packaged in accordance with common rules for proper transportation. Deliveries are always ex factory. Consequently, ELIET cannot be held liable for any damage that occurs during transport.
- After its assembly in the factory, the machine was subjected to a brief test run to test its proper functioning and to carry out certain adjustments. To transport the machine the mudguards were not fitted. As an authorised dealer of the brand, you will need to complete the assembly before delivering the machine to the new owner
- The machine and the trailer were built in accordance with the European Type Approval. ELIET cannot be held liable for possible deviations or shortcomings with respect to any local regulations or legislation. It is the dealer's responsibility to adapt the machine to any applicable local regulations. When making such adjustments, the dealer shall always inform ELIET of these in writing, providing the necessary images (info@eliet.eu)
- The machine is packed with a limited amount of oil and fuel. The dealer must check the oil level and refill if necessary according to the instructions in this manual (or those in the engine manual).
- The dealer must check the tyre pressure and add the necessary pressure (3.4 bar). He must also check the wheel bolts again and adjust the torque (120 Nm).
- The dealer must start the engine and check all machine functions. He must also test the proper functioning of the safety mechanisms on the machine. ("Read §8.2 Safety provisions" on page 22".)
- After this test run, the dealer must check the belt tension and adjust it after the initial stretching that has occurred during the short testing period. He must expressly point out to the new owner that the belt tension must be checked and adjusted again after the first 10 hours of use. ("Read §11.6.4 Checking the tension of the blade shaft drive belt." on page 90")
- The dealer must check that the torque on the blade bolts is correct (69 Nm) using a torque wrench. He must expressly point out to the new owner that the blade bolts must be checked again after the first 5 hours of use. He must also point out to the owner that these checks must be carried out as well 5 hours after any turning or replacement of the blades.
- The machine comes with a tool to lift the feed roller manually.. ("Read §11.4.6 Lifting the in feed roller manually" on page 70")
- The dealer must hand this tool to the new owner of the machine. He must also explain and demonstrate the use of this tool and check whether the owner is able to use it.
- When transferring the machine to the new owner, the dealer must check that the power plug is compatible with the socket of the towing vehicle. If necessary, the connection plug must be converted.
- When attaching the machine to the towing vehicle, the dealer must check whether the transport lights on the machine work correctly before allowing it to go out on the road. If necessary, adjustments must be made.
- The dealer makes sure the machine is correctly registered on the Eliet website. This, in order to avoid any warranty disputes. For more information, please read the warranty conditions ("Read §16. Warranty-conditions" on page 107")

10. Operating instructions



10.1 Preliminary checks



Caution :
Before taking the machine out on the road for transport to the place of work, the following checks must be carried out

1. Check the tyre pressure.
2. Check the proper functioning of all transport lights (indicator, brake light, reversing light, rear light, number plate light).
3. Check that the safety cable/chain has been correctly attached to the towing vehicle.
4. Check the safe attachment to the trailer hitch of the vehicle.
5. Check whether the support wheel has been sufficiently retracted and firmly secured so that it cannot extend by accident during transport.
6. Check whether both support legs have been pulled up and locked into the retracted position with a pin.
7. Always replace the wheel wedges in their supports on the machine.
8. Check whether there is a number plate.
9. Check whether the fuel and oil tank lids have been correctly attached.
10. Check whether the protective covers have been correctly closed and locked. (§"Read §11.4.1 Opening the protective covers" on page 63")
11. Check whether the maintenance hatch has been correctly closed and locked
12. Check whether the discharge chute has been folded down in transport mode and correctly locked (§"Read §10.4.1. Folding the discharge chute in and out" on page 37")
13. Check whether the key has been removed from the ignition.
14. Check that there are no loose parts in the hopper or on the trailer.



Caution:
Before starting to shred, always run through the checklist below.

Checklist

1. Check the oil level of the machine. ("Read §11.5.1 Checking the oil level in the engine crankcase" on page 73")
2. Ensure there is enough fuel in the tank. If necessary, fill up the tank. (§ "Read §10.2 Filling up with fuel" on page 35")
3. Check whether the air filter is not too dirty (§ "Read §11.5.5 Cleaning the air filter" on page 77") .
4. Check the water separator in the diesel pipe. Empty it if necessary (§ "Read §11.5.7 Emptying the water separator (only for Kubota diesel version)" on page 78")
5. Check that the radiator grid is not obstructed and air can pass through easily. Clean if necessary ("Read §11.2.2 Periodic maintenance" on page 59")
6. Check whether there is enough coolant in the radiator grid. Refill if necessary. ("Read §11.5.9 Topping up the cooling liquid (only for water cooled diesel engine)" on page 80")
7. Satisfy yourself that the shredding knives are firmly in place and in good condition
   - If they need to be sharpened, this must be done first
   - If one detects cracks or fractures in a blade, this blade must be immediately renewed
   - For safety's sake, tighten the blade bolts
8. Check the belt tension on the main drive between the engine and the blade axle and the secondary drive between the rotor and Axelero™. If this is insufficient, you will first need to adjust the belt tension. ("Read §11.6.4 Checking the tension of the blade shaft drive belt." on page 90" and "Read §11.6.6 Checking the tension of the AxeleroTM drive belt" on page 92").
9. Check that no maintenance alarm has been activated. ("Read §14.4.1 Alarm notifications" on page 104".)
10. Check the safety provisions ("Read §8.2 Safety provisions" on page 22".)
11. Check whether all safety shields have been correctly closed and locked.("Read §8.2 Safety provisions" on page 22".
12. Place the discharge chute in its working position. (§ "Read §10.4.1. Folding the discharge chute in and out" on page 37")

Once these items have been checked and approved, you can prepare the area of operation ("Read §10.3 Preparing the work area" on page 36") and move the machine to the work site

10.2 Filling up with fuel

The fuel level can be read from the fuel meter on the LCD display. As soon as the fuel sign on the dashboard appears in red, the fuel tank should be refilled by way of precaution.
When the minimum position is marked, the fuel tank still has a reserve capacity of 8 L / 2US gal.
Only use fresh fuel.



For you information :: :
The fuel tank has a capacity of 40 L./ 10.57 US gal.



Warning :
Under certain conditions, diesel is extremely flammable and extremely explosive. Fire and explosion caused by diesel can result in serious burns or damage to property. Thus, always take note of the following points.

- Store the fuel in an approved tank. Keep this tank out of reach of children.
- It is strictly prohibited to refill the fuel tank near an open flame
- The fuel tank must be refilled in a well-ventilated area.
- Never top up fuel at a location where work is to be performed later. Always keep all persons at least 10m / 40ft away from the work area. This is done to prevent any fires from occurring
- Do not add fuel while engine is running. Always allow a few minutes for the engine to cool off before topping up with fuel.
- Keep the protective covers closed while refilling the fuel tank, so that the fumes that are released cannot enter into contact with hot engine parts or ignition mechanisms.
- Clean the area around the fuel tank cap and then remove this cap.
- The filling opening is large (diameter 76 mm / $2^{63/64}$in) and easily accessible, so that the nozzle of the fuel pump can be directly inserted into the opening. However, if the tank is refilled with a jerrycan, ELIET recommends the use of a funnel to prevent the risk of spilling fuel.
- The tank must be filled until the fuel level at the bottom of the neck of the filling opening is reached.
- Refit the cap onto the tank as soon as possible. This will allow you to keep unwanted rubbish from getting into the tank.
- Be careful not to spill petrol onto clothing. If petrol does come into contact with your clothing, change this clothing at once
- It is unsafe and thus expressly forbidden to fill the fuel tank in the vicinity of smokers or naked flames.
- IIf fuel is swallowed or comes in contact with the eyes, rinse the eyes immediately with a lot of water and consult a doctor if necessary

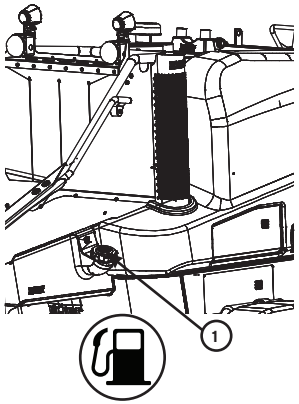

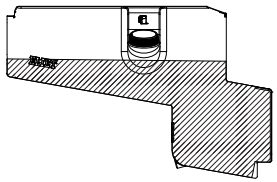



Caution:
Be careful not to put fuel in the hydraulic oil tank by mistake!

10.3 Preparing the work area

- The access route for the machine to the place of work must be free of obstacles
- First, clear the area where the machine will be used
- The machine must not be used near places where children play or are present. A sufficiently large perimeter (10m / 40ft) must be marked off so that no one can enter the work area by mistake.
- The machine must be set up in such a way that the wind does not blow the ejected debris back towards the machine.
- The routes used to bring in the pruning must be freed of any obstructions to avoid tripping hazards. Here, too, operators must secure their safety.
- Turn the chute so that the projection of the debris cannot injure people or damage property (§"Read §10.4.2 Turning the blow chute" on page 38".)
- If the shredder remains connected to the towing vehicle during use, the nose wheel and the support legs do not need to be used. However, you must always ensure that the hand brake of the vehicle is on.
- If the shredder is disconnected for use, the nose wheel and support legs must be used to guarantee the stability of the machine.
- The nose wheel and support legs must always be adjusted so that the bottom of the feed hopper is 60 cm / $23^{5/8}$ in from the ground.
- The machine must not be used when placed on a slope greater than 5% (in any direction).
- The machine must be placed on solid ground with sufficient bearing capacity so that the wheels or support points do not sink into the ground. Otherwise, if a different set-up is not possible, floor plates must be placed under the machine, covering a larger surface, in order to ensure a stable and balanced set-up.
- Make sure to sort the material beforehand. In this way, the operator is sure that no foreign objects will enter the machine with the material.
- Foreign objects are defined as: any non-organic object or branchy material in excess of the stated capacity (such as metal, stone, plastic, pvc, cords,...). Some of these can cause serious damage to your machine or can be ejected, virtually as projectiles towards the user
- Never run the machine in an enclosed area. If this is done, there is a danger of being poisoned by the fumes from the engine.

10.4 Turning and positioning the blow chute and deflector-flap



Warning :
Never start the engine when the chute is not in the upright working position. In transport mode the chute is directed towards the feed area. When starting the engine, the blades and the ejection system start working immediately. As a result, any remaining debris from a previous use could be ejected towards the operator and injure him.

10.4.1. Folding the discharge chute in and out



Caution :
Always turn off the engine when you want to fold the discharge chute in or out, and wait until all rotating parts have come to a stop.

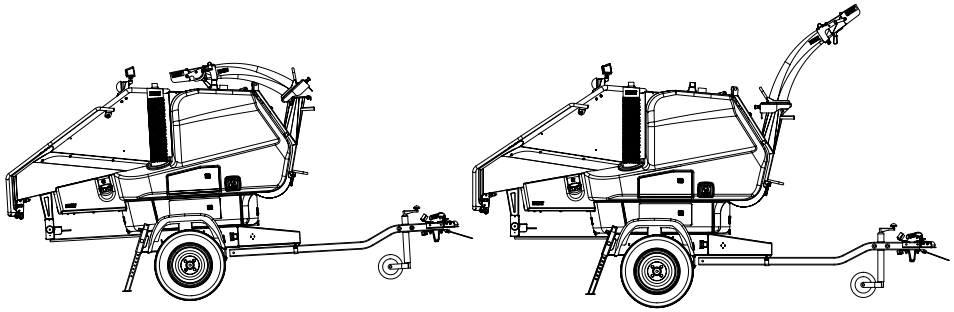

To reduce the maximum height for transportation, and air resistance during transportation, the machine offers the possibility to fold down the discharge chute. To put it back up, proceed as follows:

- Release the locking lever for turning the discharge chute.
- Then step onto the frame of the trailer near the left wheel guard (1). This way, you can easily reach the handle of the chute.
- Now, firmly pull the handle upwards (2), so that the discharge chute is pulled out of the rubber support.

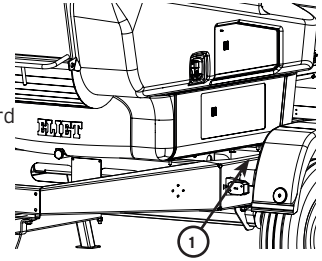

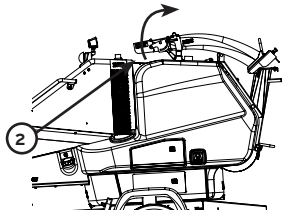

When the discharge chute is loose, you can tilt it upwards and turn it at the same time. When the discharge chute is in its highest upright position, a lock pin (3) will automatically secure it there.

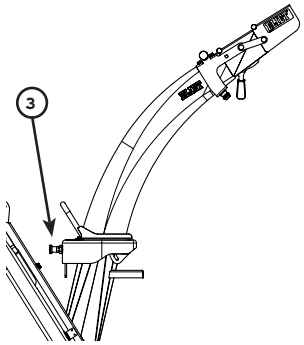

To put the discharge chute back into transport mode, proceed as follows:

- Before putting the discharge chute back into transport mode, first you will need to place the deflectors into their most extended position (read the description in the paragraph below).
- To prevent the discharge chute from projecting debris towards the operator area, there is a certain range within which the chute cannot be positioned. To put the discharge chute back into the transport position, you must turn it until it hits the stopper.
- Hold the discharge chute and pull out the lock pin (3).
- Tilt the chute forward a little until you notice that you can turn it past the stopper (4).
- Now turn the chute until it is in line with the axle of the machine and the two protruding hooks are positioned opposite the rubber support.
- Lower the chute until the hooks fall into the openings in the rubber support.
- Now push the chute down firmly so that the hooks disappear completely in the rubber support and click into it. (5)

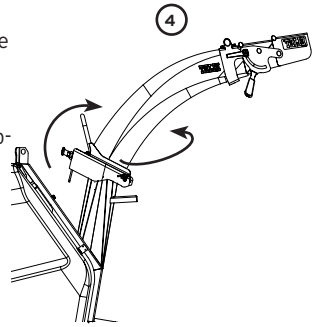

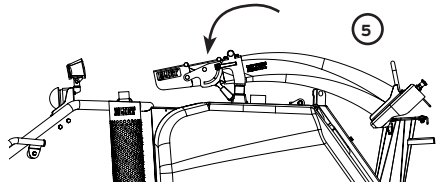



10.4.2 Turning the blow chute

Warning :
Try to adjust the discharge direction before starting the engine. At that time, there is no risk of projection, and the adjustments can be made safely. If you want to adjust the discharge direction during the work, you will need to protect yourself against possible injury caused by projected debris. Wear suitable protective clothing and personal protective equipment (safety glasses, head protection, face protection, gloves)

If you want to turn the discharge chute, you will always need to stand on the side opposite the direction in which you want to turn the chute. This way, you do not stand in the projection area of the discharge chute.

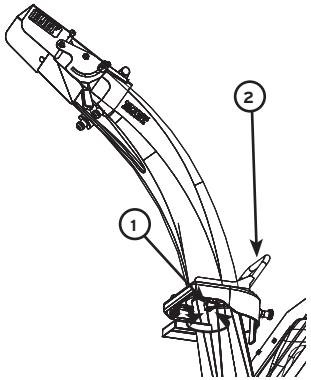

The turning point of the discharge chute is equipped with a locking lever (1), thanks to which the chute can be locked in any position within the turning range.
Turn the locking lever clockwise until the tension on the turning point disappears and the chute can be turned.
The discharge chute is equipped with a handle (2) in order to be able to safely turn the chute.
When the chute is in the desired position, turn the locking lever counter-clockwise to secure the chute in this position.
This will prevent the discharge chute from turning as a result of the blowing force and the impact from the debris.

10.4.3 Adjusting the deflectors



Caution :
When the engine is running, there is a real possibility that debris is projected which can cause injury. Be careful and avoid entering the projection area. Wear suitable protective clothing and personal protective equipment (safety glasses, head protection, face protection, gloves)

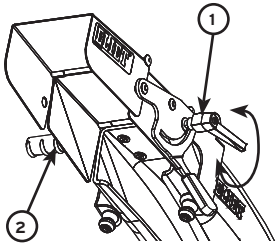

Before adjusting the position of the deflectors, first make sure that there are no bystanders or fragile objects in the projection area. If necessary, the area must first be evacuated and a perimeter around the projection area must be marked off so that no one can accidentally enter this area.

To fix the position of the deflectors, you need to unlock the position lock (1). There is a lever for this on the left of the discharge chute.
Turn this lever counter-clockwise to release the deflectors.
The deflectors consist of two flaps. On the left of the discharge chute there is a lever which allows you to control both flaps with a single movement.

Once you have chosen the desired flap position, turn the locking lever clockwise to fix this position.
When you leave the chute area, avoid walking through the projection area.

10.5 Starting and stopping the engine

10.5.1 Starting the engine



For your information:
Also, read the engine manual.



For your information:
The machine comprises a number of safety mechanisms which can prevent the engine being started. First check whether these safety mechanisms have not been activated:

1. Safety switch on the protective covers: check whether these protective covers are closed and firmly locked.
2. Safety switch that detects the presence of the calibration sieve: check whether both elements of the calibration sieve are present and properly locked.
3. Safety switch on the maintenance hatch: check whether this hatch is closed and locked in position.
4. Engine oil level control: check whether the engine oil level is correct.

A number of elements can negatively affect the proper functioning of the engine:

1. Check that the air filter is not dirty and the air can pass through smoothly.
2. Check that the fuel level is sufficient.
3. Check that there is no excess water in the water separator of the diesel pipe.
4. Check whether the radiator grid and the ventilator grille let sufficient air through
5. Check that the fuel filter is not dirty.



Warning :
Before starting up the machine, make sure to wear the ear defenders supplied as standard.



Caution :
Make sure there are no unauthorised persons within a radius of 10m / 40ft around the machine before starting the engine



Warning :
VAs soon as the engine is running, the blades will be moving. If there is any remaining debris in the shredder or the Axelero™ chamber, this will be projected. Prevent any presence of people in the projection area.

Turn the ignition key (1) to position I, so that the LCD display (2) of the machine lights up.

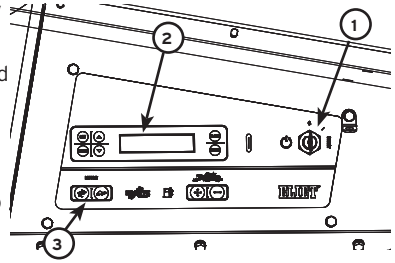

- When the message 'Preheating engine' has disappeared from the LCD display, you can turn the ignition key further to the START position.
- Let the starter motor run until the engine has enough speed to keep running on its own. Turn the key back to position I.



For your information :

If it takes a few seconds for the engine to come up to speed on its own, the machine control system will automatically interrupt the starting procedure to avoid overloading the starter motor. The following message will appear on the LCD display: 'Starting failed'. The starting procedure will have to be repeated.



Caution :

If the engine does not start immediately, you will have to wait 10 seconds before starting a new starting procedure. If the engine still won't start after several attempts, the cause of the starting problem will need to be determined. Consult your authorized ELIET dealer.

- To improve the starting of the engine, the control system has been programmed so that when starting the engine, it will immediately accelerate to full throttle. However, in order to let the engine warm up homogeneously, it is better to do this at a low rotational speed. At the bottom left on the instrument panel there are two buttons (3) underneath the word 'Engine'. One button has an image of a hare, the other one of a tortoise. If you press the button with the hare, the engine will go to full throttle. If you press the button with the tortoise, the rotational speed will go to idle.
- On the LCD display you will now see the date, the time and the temperature*. You will also see the number of hours the engine has been running and the rotational speed of the engine. If the fuel sign lights up in red, you first need to refill the fuel tank before continuing.

* The temperature is measured inside the instrument panel. The value shown on the LCD display may deviate from the real outside

.

10.5.2 Turning off the engine



Caution :

The engine may only be turned off once the shredder and the Axelero™ chamber are empty. This means that no more debris will be ejected from the chute.

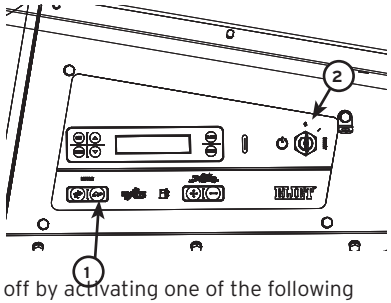

- Remove all branches from the feed hopper.
- Turn off the feed roller so that no new garden waste is fed into the machine.
- Wait a few moments until all garden waste has been processed.
- Lower the rotational speed of the engine to idle. Do this by pressing the button with the image of a tortoise (1).
- Turn the ignition key (2) to the position O.
- In an emergency situation you can also turn the engine off by activating one of the following safety mechanisms:
  - Open one of the protective covers.
  - Open the maintenance hatch.

10.6 Operating the machine

10.6.1 Before starting work

When the shredder has been correctly set up in its working environment, the work can be started. (zie "Read §10.3 Preparing the work area" on page 36")

- Wear proper apparel, protective gloves and safety equipment as instructed in this manual ("Read §8.3 Safety instruction" on page 25").
- A good gardener is well organized and plans his work. This will enable you to have perfect control to avoid accidents.
- The wood should be systematically stacked before commencing the work : thick branches, thin branches, leaves and damp products. Ensure that the material does not contain any foreign objects.
- Never run the machine in an enclosed area. If this is done, there is a danger of being poisoned by the exhaust fumes from the engine.



Warning :
Before turning on the engine, make sure that the discharge chute is in the upright position. Point the discharge chute and the deflectors in the desired direction. ("Read §10.4 Turning and positioning the blow chute and deflector-flap" on page 37")

10.6.2 Switching on the work lights

The Mega Prof comes with 2 work lights mounted on the support of the anti-projection curtain. When it gets dark early in winter, you can safely continue working thanks to these work lights. The work lights can be turned and tilted in order to direct the light towards the desired work area.

The work lights at the top of the machine are controlled via the menu in the dashboard area.

- Turn the ignition key (1) to position 1 and wait until the start screen with the date and time appears on the LCD display (2).
- By pressing the Menu button repeatedly, you can scroll through the menu on the LCD display until you see the indication 'Lights Enabled: NO'.
- You can switch the lights on by pressing ⮝. To switch the work lights off again, press ⮟ in this menu window.

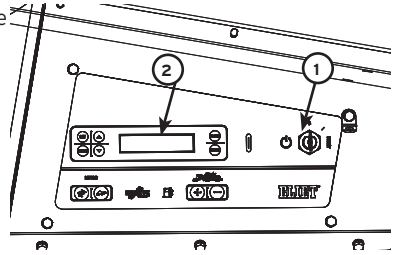



Caution :
When leaving the machine with the engine off, you should always switch off the work lights to prevent the battery running out as a result of the power consumed by the lights.



For your information :
When you turn the engine off by turning the ignition key to O, power to the lights will also be interrupted. When you restart the engine, the work lights will automatically be switched off by the machine. You will therefore need to switch them on again.

10.6.3 Activating and de-activating the Eco-Eye™ system

The function of the Eco EyeTM system is to ensure that the engine is automatically set to idle as soon as the system detects that the machine is no longer active shredding material. As the dropping rotational speed will also activate the ABM (anti-block-motor) system, the feed roller will also automatically stop.

An infrared sensor monitors the feeding area. As soon as movement is detected in this area, the engine will automatically go to full throttle so that the feed roller is activated again.



For your information :
The detection range of the infrared sensor is an area of 5m / 16ft in front of the feed hopper.

The Eco Eye™ system is activated by default. You will know it is activated by the Eco Eye™ logo on the instrument panel underneath the LCD display, which will light up in white.
When the machine detects a passive moment, the Eco Eye™ logo on the instrument panel will light up in green.

If you want to deactivate the system, follow the following procedure:

- Turn the ignition key (1) to position 1 and wait until the start screen with the date and time appears on the LCD display (2).
- By pressing the Menu button repeatedly, you can scroll through the menu on the LCD display

When the indication 'Eco Eye enabled: Yes' is visible on the LCD display, you can turn off the Eco Eye function in this screen.

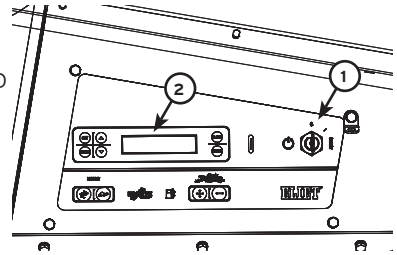

- By pressing , 'Eco Eye enabled: No' will appear on the screen. The system has now been deactivated and the logo on the instrument panel has been switched off.

When you have turned off the Eco Eye™ system, the machine will remember this. The next time you start the machine, the system will remain disabled. In other words: it is not activated automatically when you start the machine again. This means you will need to activate it again when desired by following the procedure above.



For your information :
To save fuel and reduce exhaust gas emissions, the use of the ECO EYE™ system is absolutely recommended. Only when you need to shred a large amount of moist garden waste, which increases the risk of the sieve or chute getting clogged, can it be useful to deactivate the Eco Eye™ system. When the rotational speed of the engine is lowered at passive moments, the speed of the Axelero™ will also be lowered. This reduces the vacuum effect and largely eliminates the cleaning air flow through the machine. This could increase the risk of clogging.

10.6.4 The shredding itself

Once the engine has been started, let the machine run idle for about 5 minutes to warm up. (§"Read §10.5 Starting and stopping the engine" on page 40").



Warning :
As soon as the engine is running, the blades will be moving and the Axelero™ will be driven. As a result, any debris remaining in the chamber and the Axelero™ will be ejected.

During shredding, the engine must always run at full throttle. On the instrument panel, press the button with the image of a hare (1) to increase the rotational speed of the engine to the maximum.
To make sure that the shredder cannot work at a low rotational speed, it is not possible to activate the feed roller when the engine is not running at full throttle.
On the LCD display the message 'Speed up engine' will appear and the light behind the button with the image of a hare will flash to guide the operator through the action.

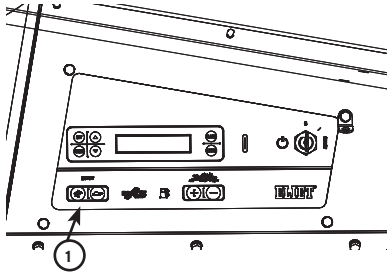



Caution :
Before activating the feed roller, you must make sure that there are no foreign objects in the feed hopper.

10.6.4.1 Operating the feed roller

- Before turning on the feed roller, first you need to check that neither of the two Top Feed Stop buttons have been pressed.
- Also check whether the Feed Stop bar has not been pressed.
- In each of these cases, a corresponding error message will appear on the LCD display of the instrument panel.
- To control the feed roller, two control buttons are provided on either side of the feed hopper. These buttons are easily visible and within reach from the entire operator area.
- If you are left-handed, you should preferably use the safe operator area to the right of the feed hopper.
- If you are right-handed, you should use the safe operator area to the left of the feed hopper.

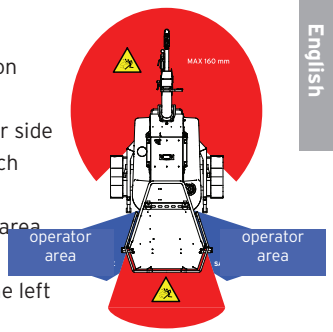



Caution :
Before activating the feed roller, you must make sure that there are no unauthorised persons within the 10m / 40ft perimeter around the machine.
The top button is marked as IN and serves to make the feed roller insert material into the shredding system. When you press the button briefly, its edges will light up and the feed roller will start turning. The roller will continue turning until it is explicitly deactivated.

The roller can be explicitly deactivated in 4 ways :

1. Press this IN button (1) again
2. Press the bottom OUT button (2).
3. Press the safety bar (Feed Stop bar) that is fitted to the bottom and sides of the hopper (3).
4. Press one of the Top Feed Stop buttons in (4).

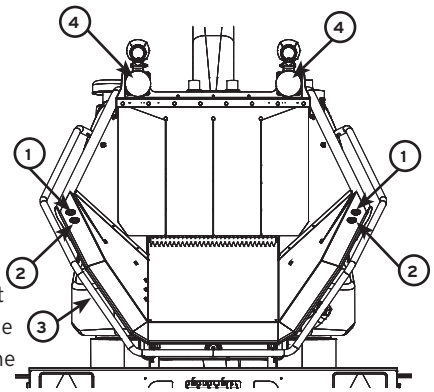

The bottom button is marked as OUT. With this button you can make the feed roller turn in the opposite direction to make the inserted garden waste come out again. You must keep the button pressed to make the feed roller turn. As soon as you release the button, the feed roller will stop turning.
Once the feed roller has been activated, you can start feeding pruning.

To feed green waste into the hopper it is best to stand next to the feed hopper. This way, you will be outside the projection area of possible debris that may find its way through the safety curtain during the feeding.

When feeding branches into the hopper, the thickest part should be inserted first. The leaves will be the last to enter the machine.
Push the branch all the way against the roller so that the teeth on the roller can reach it and get on top of it.

When feeding several branches simultaneously, make sure these have similar diameters. This way, the feed roller can maintain its grip on the branches and determine the feeding speed. This will prevent branches from being pulled in in an uncontrolled manner, which could cause problems with the machine.

Large amounts of shorter pruning must be entered into the feed hopper in bundles. You can use a bundle of pruning to push another bundle against the feed roller in order for it to be able to grab it and pull it in.

You could also use a thicker branch to push a bundle through.



Caution :
Never use your feet to push the pruning towards the feed roller. It is also forbidden to use a shovel or rake to push the pruning into the machine.

In order to work as efficiently as possible, choose the right feeding speed, depending on the nature and thickness of the green waste to be processed. On the dashboard you can continuously increase or decrease the speed of the feed roller.
In the factory the speed is set to 30%; this is the recommended speed of the feed roller

This speed can be adjusted via the menu system of the dashboard.
- Press the Menu button (1) to go through the menu.
- Keep pressing until the option 'Set feeder speed' appears on the LCD display.
- You can adjust the speed by pressing ▼ or ▲.

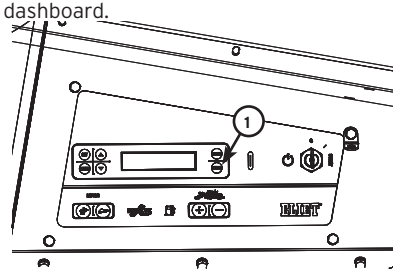

The machine is equipped with an anti-blocking system which automatically interrupts the feeding process as soon as the engine is subjected to a critical rotational speed. This system works autonomously, so the operator only has to worry about feeding green waste. When the ABM system intervenes and makes the feed roller stop briefly, the LED light in the control button for feeding will flash.

However, when inserting long branches with a diameter that is close to the maximum over a considerable length, you should preferably stay near so that you can intervene manually if necessary, in case the machine threatens to get blocked after all. In such case, you can adjust the feeding speed.

If, as a result of overload, the rotational speed drops below the critical threshold of 2,300 rpm, this may lead to problems with the engine. In such case, the system will automatically switch the feed roller to the reverse mode in order to force the load out and prevent a blockage.

In case of widely branched branches, or branches with complex thick parts, you should always stay near in order to be able to intervene manually if necessary. Just before a complex part it is a good idea to interrupt the feeding process manually for a moment by pressing the IN button, waiting a few seconds, and then activating the feeding process again. This way, the machine can build up additional inertia in order to process this complex object more easily.

If the feed roller has trouble grabbing a complex thicker part of a branch, then stop the feeding. Take the branch back out by pressing the OUT button. Reposition the branch and insert it again.



Warning :
If the feed roller has trouble grabbing the pruning during the feeding process, you should never try to help with your hands or feet close to the feed roller. Use another branch to push the pruning further in from a safe distance.



Caution :
Never use a step for feeding the hopper with garden waste

10.6.4.2 In case of clogging

In the chipping chamber blades cut the green waste into small pieces at a high chopping frequency. The longer the chips remain in the chipping chamber, the smaller they will become. If the green waste that is being processed has a high moisture content, this moisture will be released during chipping. This will make small chips stick together and, as a result of the centrifugal force, be deposited on the wall of the chipping chamber.

If green waste contains a large proportion of woody material, these harder and heavier chips will be projected against the wall of the chipping chamber and loosen chips that are stuck to the wall and help expel these via the mesh of the calibration sieve. In other words: wood has a cleaning effect.

However, if the proportion of wood is too small to have this cleaning effect, the moist material will not be expelled and may accumulate on the walls of the chipping chamber and on the sieve surface. Over time, this may cause the sieve mesh to get clogged, as a result of which the chips will not be expelled and the chipping chamber will fill up.

Therefore, when processing rather soft green waste which contains a considerable amount of moisture, you must be careful to prevent clogging. Keep an eye on the discharge chute. If the ejection distance is large enough and the material ejected through the chute is in proportion to the material inserted, the shredder is working correctly. However, if the ejection distance remains limited, despite the position of the deflectors, and the volume is not in proportion to the material inserted, this indicates that the chipping chamber is filling up or the system is getting clogged.

Clogging may occur in two places:

a. In the mesh of the calibration sieve
b. In the discharge chute

What to do:

1. Quickly insert some branches with a large woody structure (if available). The clogging will largely disappear on its own
2. If no wood is available, a calibration sieve with a larger mesh, or the sieve for moist material, must be mounted.

How to change the calibration sieve:



Warning :
To change the calibration sieve, you need to open the maintenance hatch and will get access to the chipping chamber and the Axelero™ chamber, which means you will be exposed to certain risks. Be attentive and wear the necessary protective clothing (gloves, head protection, safety glasses).



Caution :
To carry out maintenance, you must always stop the machine and remove the key from the ignition

- Open the maintenance hatch (lees "Read §11.4.4 Opening the AxeleroTM chamber" on page 66")
- Loosen the accumulated chips in the Axelero™. These may be stuck at the back of this chamber. If necessary, use a tool to loosen the chips.
- Remove all chips from the Axelero™ chamber. Turn the blades of the Axelero™ wheel manually. The spiral shape will make the chips gather centrally on the blade, allowing you to easily sweep them out of this chamber.
- Open the locking mechanism of the calibration sieve and open the chipping chamber. Remove the top part of the sieve
- Remove all chips that are present in the chipping chamber and stuck to the chipping chamber walls.

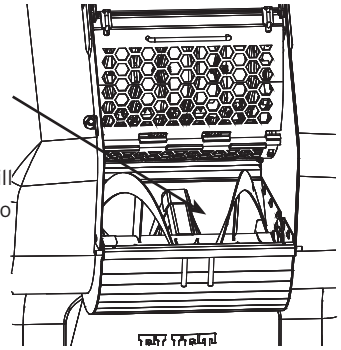



Caution:
The blades can be sharp and cause injury. Even when the active side of the blade has become blunt, the other side may still be razor-sharp. Always wear gloves and use a tool to remove the chips from between the blades
.

If you need to remove chips from between the blades in an area that is difficult to reach, it may be useful to turn the blade axle. Never use the blades as a lever for this. Given that the blade axle and the Axelero™ are connected to each other via a belt drive, you can safely turn the Axelero™ to turn the blade axle.



Caution:
Be careful that your hands do not get crushed between the Axelero™ and the walls of this chamber. Chips that have fallen from the chipping chamber and found their way into the Axelero™ chamber must always be removed. .

The calibration sieve consists of two parts: a top part and a bottom part. After clogging, one of these parts can be replaced by a sieve with a larger mesh in order to reduce the risk of clogging. You can also mount a special sieve for moist material.

The following mesh sizes are available :
Calibration sieve with holes off 30 mm / 1 3/16 inch
(Article number: upper sieve : MA 018 011 001 Lower sieve : MA 018 011 002)
Calibration sieve with holes off 35 mm / 1 3/8 inch
(Article number: upper sieve : MA 018 011 003 Lower sieve : MA 018 011 004)
Sieve for moist material :
(Article number: upper sieve : MA 018 001 005 Lower sieve : MA 018 011 006)

Caution :
You will only be able to start the engine when the sensor detects the presence of the sieve in its closed position.

Caution :
If you have mounted the sieve for leaves and moist material, you must only use it for soft and moist material. Do not chip wood using this sieve. The large wood chips could get stuck between the Axelero™ turbine wheel and the wall of the chamber, damaging the turbine wheel.

10.6.4.3 Tips for proper use

- The ABM system controls the load by controlling the feeding process via the feed roller and the feed belt. However, neither the ABM nor the operator can control green waste that has gone past the feed roller.
- With irregular branches (nodes, forked branches), ensure that these are fed into the machine in an optimal position. If necessary, stop the roller and reposition the branch halfway through the feeding process to ensure that the machine does not jam.
- Trunks are preferably chipped with all leaves attached. When inserting branches, the thickest part must always go in first. Make sure that the final part does not enter the roller crosswise. For the machine this would be a load equivalent to a branch with a diameter equal to the length of the part of the branch that is positioned crosswise. Logically, this will often be too much for the machine to handle. For this reason, it is advisable to always feed trunks against the wall of the hopper. This way, they are guided and the risk of them ending up in a crosswise position is reduced.

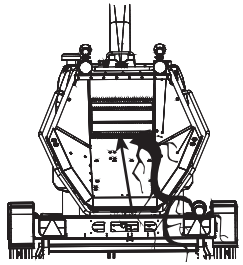

- Be careful when inserting several branches with different diameters. The branch with the thickest diameter will lift the feed roller up, so smaller branches will be able to enter the machine in an uncontrolled manner. This could cause problems with the machine. When you insert several branches simultaneously, these should preferably have a similar diameter.
- You should always estimate the processing capacity when feeding material into the machine. Take into account that the capacity is not only determined by the newly inserted material, but also by the amount of chips still turning around in the chipping chamber and being cut, as these will take up part of the chipping capacity.
- When you insert a large volume of green waste that contains a lot of leaves at the same time, the machine will need some time to process this volume. You should therefore make sure that the material inserted next does not require too much chipping capacity. As soon as you hear that the engine is back to full speed, you can use the full capacity of the machine again.
- If you shred wood species with a tough fibre (poplar, willow, birch ...), you will always have to make sure that the blades are sharp before starting the shredding. With sharp blades it is easier to cut through tough fibres. Blunt blades make tough fibres fray, leading to a risk of clogging.
- If, during shredding, you notice that the ABM system is activated very regularly, you must reduce the feeding speed a little. (“Read §10.6.4.1 Operating the feed roller” on page 46”)

Caution :
If you notice a strange noise during the work, immediately stop shredding. Stop the engine and investigate the cause of the defect. Before proceeding, perform the necessary repairs.

Caution :
After each shredding session, you must take the time to clean the machine. This is essential for the proper functioning of the machine during the next session. It will also allow you to notice and remedy any wear, breakage or other anomalies that may jeopardise your safety in due time. (§”Read §11.3. Cleaning the machine” on page 61”)

10.6.4.4 What to do in case of a blockage

Caution :
To clear a blockage, you will need to empty the chipping chamber and the Axelero™ chamber. To do so, you will need to get close to the blades, which poses a risk of injury. Therefore, you must always wear suitable personal protective equipment (safety gloves, glasses and head protection).

Caution :
To carry out maintenance, you must always stop the machine and remove the key from the ignition.

- Remove all branches from the feed hopper. Branches that are stuck underneath the feed roller must be removed.
- In order to clear the area behind the feed roller (between the feed roller and the blade axle), you need to lift the feed roller up and lock it in its highest position. (§”Read §11.4.6 Lifting the in feed roller manually” on page 70”)
- Open the maintenance hatch (§”Read §11.4.4 Opening the AxeleroTM chamber” on page 66”)
- Remove all chips from the Axelero™ chamber. Turn the blades of the Axelero™ wheel manually. The spiral shape will make the chips gather centrally on the blade, allowing you to easily sweep them out of this chamber.
- Open the chipping chamber and take off the top sieve part. (§”Read §11.4.5 Opening the shredding chamber” on page 68”.)
- Remove all chips and pieces of wood. Loosen and remove any jammed chips or pieces of wood.
- Once the chipping chamber is empty, mount the sieve again in the correct position.



Caution :
A sensor will detect whether the sieve has been mounted correctly. Only then will you be able to start the engine again.

- Empty the Axelero™ chamber so that its free movement is not hampered when restarting the engine.
- Close the maintenance hatch. A safety sensor will check this. Only after the hatch has been properly closed can the shredder be started again.
- After restarting the machine, one should be more careful in order to prevent another blockage.

10.7 Transporting the machine



- Always turn off the engine before transporting the machine.
- Remove the key from the lock so that it cannot get lost during transport.
- The chipping chamber and the turbine must be empty before transporting the machine. There must not be any branches in the feed opening.

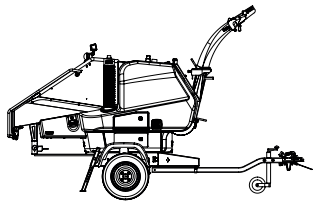

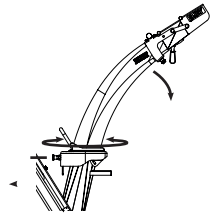

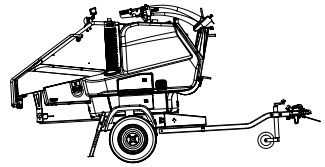

- Fold the discharge chute into transport mode (§ "Read §10.4.1. Folding the discharge chute in and out" on page 37")
- Check that all protective covers are closed and locked into position.
- Push the two support legs back up. To do so, loosen the rotary knob by turning it counter-clockwise. Also release the locking pin by turning the lever. Now push the support legs up so that the locking pin can click into place in the highest position of the support leg. Then tighten the rotary knob again.
- Now turn the lever of the nose wheel so that the coupling point is higher than the trailer hitch.
- Remove the wheel wedges from the wheels and click them back into place on the trailer.
- Roll the machine so that the coupling point of the tow bar is positioned immediately above the trailer hitch.
- Now turn the lever of the nose wheel again to lower the coupling point. Keep doing this until the coupling point clicks into place on the trailer hitch and the nose wheel is lifted from the ground. Keep turning until the lever cannot be turned any further and the nose wheel is pulled against the guide buffer.
- Now check whether the coupling point has been locked into place on the trailer hitch. There is a mark on the lever of the trailer hitch to indicate that it is properly locked.
- If necessary, you will need to release the holder of the nose wheel and position it higher up to ensure maximum ground clearance. Make sure you fasten the holder of the nose wheel tightly afterwards, so that it cannot lower during transport.
- Now connect the safety cable to the vehicle.
- Insert the lighting plug into the socket of the vehicle.
- Check that the transport lights work properly before driving off.
-

- Finally, check the machine one last time to make sure there are no tools or pruning in the hopper or on the trailer which could fall on the road during transport



Warning :
The machine and trailer are a heavy combination. Do not overestimate your pushing capacity. Back strain may lead to long-term pain, rheumatism and paralysis. Always ask for help if the load is too heavy for you.

11. Maintenance

11.1 General



For you information :
The dealer's personnel are always at your service. The ELIET dealer can always rely on comprehensive support from ELIET NV, so that we can work together to find a solution for any problem that you may have. For a repair or for the maintenance of the engine, you can always contact your ELIET dealer or a maintenance service that is recognized by the engine manufacturer. If you need to contact these services, please provide us with the Model Number and Serial Number of both the machine and the engine, and also describe the problem in detail



Caution :
Only use genuine ELIET replacement parts These service parts are manufactured to the same strict quality control requirements and degree of craftsmanship as the original equipment

Perform maintenance in a room intended for this purpose. This room must be:

- Easily accessible
- Dust-free
- Quiet
- Spacious
- Well lit
- Clean and tidy



Caution :
Maintenance performed in an incorrect manner may compromise the operator's or bystanders' safety. Therefore, only technically skilled persons should carry out maintenance or repairs on a machine.

Always make sure that the engine is switched OFF before performing maintenance work. Always remove the key from the ignition lock. Let the machine cool down long enough before starting a maintenance operation.

Prior to doing service operations, first make sure to disconnect the battery cables. (Disconnect the + terminal). Never disconnect the battery for longer than 1 day. If it is disconnected for too long, some components may have to be reprogrammed. When performing maintenance, always wear gloves, and also safety glasses for some operations. These are included with the machine..

TIP:
The maintenance work described can essentially be performed by any person who possesses the requisite technical knowledge. However, ELIET recommend that the machine should be handed in to an ELIET dealer for a major overhaul each year.
Your ELIET dealer is always at your service for maintenance and advice. He stocks genuine ELIET service parts and lubricants. His staff can always obtain advice and service from ELIET, so that they can provide you with an impeccable after-sales service

11.2 Maintenance schedule

11.2.1 Special maintenance

A. Special maintenance of the blades
After inserting the blades into the rotor, the blades will bed-in after a brief period. This can cause the tension on the bolts to decrease, with the risk that the blades may become dislodged between the blade plates. This can cause irrevocable fatigue failure of the blade shaft. This must be prevented by scheduling extra maintenance after the brief bedding-in period

WHEN:
- Within the first five operating hours after starting up the new machine
- Within the first 5 hours after rotating the blades
- Within the first 5 hours after changing the blades

WHAT:
Check all blade bolts for correct torque loading and retighten if considered necessary (torque loading: 69 Nm).



Caution :
Use a calibrated torque wrench



Warning :
Failure to perform this special maintenance could result in the blades coming loose while working. This will cause serious damage to your machine and also represents a major risk of serious injury or death to the user or bystanders. All damage or subsequent damage caused as a result of this negligence falls outside the warranty.

B. Special maintenance of the drive belt

Belts have the property of stretching during the first 5 to 10 hours of use. This affects all parts a belt is made up of. As the belt becomes longer, this affects the belt tension, making it looser. This gives rise to a risk of slipping and hence wear, or the belt could start flapping and come out of the grooves of the belt wheel. This could lead to the belt breaking or suffering irreparable damage. After a short initial period of use, the belt must be tightened again.

WHEN :
- Within the first 5 operating hours after starting up the new machine
- Within the first 5 hours after changing a belt

WHAT :
Tightening the drive belt to the blade axle and to the Axelero™ . (“Read §11.6.5 Tighten the blade shaft drive belt” on page 90” and “Read §11.6.7 Tensioning the belt of the AxeleroTM.” on page 92”)

C. Special service in relation to replacing the motor oil

All wear-and-tear particles and manufacturing dirt that is created or is still present in the motor will be captured by the oil filter. The fine particles that are not filtered out of the oil will be cleaned by this special service.

WHEN :
- Within the first 5 engine hours after starting up the new machine

WHAT:
Change engine oil (“Read §11.5.3 Changing engine oil” on page 75”)

11.2.2 Periodic maintenance



Caution :
To carry out maintenance, you must always wear suitable protective clothing.

A. Routine check before/after working with the machine

Before and after working with the machine, it is advisable to make an inspection and check certain points. This enables you to intervene in time and prevent defects from occurring. This will extend the operating life of your machine.

- Clean the machine (“Read §11.3. Cleaning the machine” on page 61”)
- Check the engine oil level (“Read §11.5.1 Checking the oil level in the engine crankcase” on page 73”).
- Check the water level in the water separator (only for diesel engine).
- Check the hydraulic circuit for any leaks.
- Clean the grid in front of the radiator and blow air through it. (Careful: the cooling fins of the radiator are sharp; always wear gloves!) (“Read §11.4.2 Removing the ventilation grilles” on page 65”)
- Check the cooling system for any leaks (“Read §11.5.9 Topping up the cooling liquid (only for water cooled diesel engine)” on page 80”)
- Check the air filter, and if necessary, clean it (“Read §11.5.5 Cleaning the air filter” on page 77”)
- Check for, and if necessary, remove any chippings that had become lodged in the grooves of the drive belt
- Open the shredding chamber and check the blades for wear. Check at random whether the blade bolts are tight enough (“Read §11.6.1 Routine check of the blades” on page 83”)
- Check the machine for signs of deformation, wear, cracks. ...
- Check that none of the bolts are loose.
- Clean and lubricate the throttle cables (“Read §11.5.10 Cleaning and lubricating the throttle cables” on page 81”)
- Check the State of the vibration damped suspension of the motor (only for diesel engine)
- Check whether all safety mechanisms on the machine work correctly.



Caution :
If defects are detected in the safety system of the machine, these must first be remedied before working with the machine. Consult your authorised ELIET dealer.



Caution :
If damage to the machine or abnormal wear is observed during a routine check, this must always be repaired first before working with the machine. Consult your authorised ELIET dealer to assess the situation and propose a suitable remedy.

B. Maintenance after 10 hours

- Sharpen the blades (“Read §11.6.2 Sharpening the blades” on page 84”)
- Check the belt tension (“Read §11.6.4 Checking the tension of the blade shaft drive belt.” on page 90” and “Read §11.6.6 Checking the tension of the AxeleroTM drive belt” on page 92”)

C. Maintenance after 100 hours / six-monthly

- General lubrication (“Read §11.7 General lubrication” on page 98”)
- Renewing the engine oil (“Read §11.5.3 Changing engine oil” on page 75”)
- Turning the blades (“Read §11.6.3 Reversing and renewing the blades” on page 86”)

D. Maintenance after 200 hours / annually

- General lubrication (“Read §11.7 General lubrication” on page 98”)
- Changing the oil filter (“Read §11.5.4 Renewing the oil filter” on page 76”)
- Oil change (“Read §10.6.10 Renewing the hydraulic oil” on page 96”)
- Renewing the fuel filter (in case of Diesel engine) (“Read §11.5.8 Renewing the fuel filters” on page 79”)
- Renewing cooling liquid (in case of Diesel engine) (“Read §11.5.9 Topping up the cooling liquid (only for water cooled diesel engine)” on page 80”)
- Renewing the air filter (“Read §11.5.6 Renewing the air filter” on page 78”)
- Replacing the bearings Axelero™ (“Read §11.6.9 Replacing the bearings for the tensioning roller of the AxeleroTM belt drive” on page 95”)...

E. Maintenance after 400 hours/ bi-annually

- Replacing the bearings of the blade axle (“Read §11.6.8 Replacing the supporting roller and the bearings for the tensioning roller of the rotor belt drive” on page 93”)
- Replacing the belts
- Replacing the bearings of the infeed roller
- Replacing the supporting roller and the bearings for the tensioning roller of the rotor belt drive
- Replacing the bearings for the tensioning roller of the Axelero™ belt drive

11.2.3 Maintenance management

The control system of the machine comprises a maintenance management system. This is intended to help the operator manage the periodic maintenance of the machine without needing to keep a specific record of this.

By pressing the Menu button on the LCD display you can go through the menu until you get to the maintenance page (‘Service’). Here, you can always see when the next service is due and the number of hours of use left until this service is due.

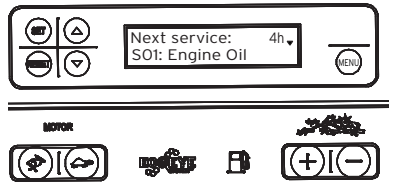

By pressing the arrow keys in this Service menu, you can also check what the next service involves.

When the time for a service has arrived, the word ALARM will light up next to the LCD display. The message 'Service Now' will appear on the display. By pressing the ALARM button, you can immediately see what maintenance has become urgent. It is also possible that several maintenance actions need to be carried out at the same time.



The necessary maintenance should be carried out soon after the alarm message appears.

Once the maintenance has been carried out, the alarm can be removed. To do so, press the ALARM button. When the maintenance that has been performed appears on the display, press the RESET button and keep it pressed for a few seconds until you see the following message appear on the display: 'Service Alarm Cleared'.

The machine now knows that it can start counting down to the next service.



Caution :
Follow the schedule as accurately as possible to benefit from the maintenance management functionality.

11.3. Cleaning the machine

It is strongly recommended that you clean the machine after each use. During cleaning, carry out the 'daily maintenance' tasks, ("Read §11.2.2 Periodic maintenance" on page 59") Failure to do so will :

- Lead to premature wear of the bearings, gaskets and drive belts
- Increase the risk of fire.
- Decrease the cooling efficiency of the engine.
- Reduced performance
- Inability to detect fractures or cracks
- Have a detrimental effect on the paint coating and the safety stickers.



Warning :
A machine that is no longer in good working condition may compromise the security of the user.



Caution :
Wear suitable clothing when cleaning.
Gloves are required.



Caution :
When the maintenance hatch is opened in order to access the chipping chamber, it must be locked so that it cannot fall unexpectedly during cleaning.

The cleaning of the machine does not only comprise the cleaning of the external parts; all protective covers must be opened as well to be able to clean areas that are not visible from the outside. Some items require specific attention:

- Empty the chipping chamber and the Axelero™ each time the machine is used
- Remove all chippings and green waste that has remained in the feed hopper.
- Remove the build up of chippings and wood residue in the recesses.
- Remove any chippings that are jammed in the guides on the feed roller arm
- Use a dry cloth, a soft brush, etc. for cleaning. To remove grease and lubricants, use penetrating oil containing molybdenum disulphide. This spray lubricates and also dissolves rust.
- It is useful to have compressed air in the vicinity so that you can use it to clean various components.
- Pay special attention to cleaning the engine. in particular, the cooling fins and air inlet must be thoroughly cleaned in order to guarantee optimal cooling of the engine.
- Check whether the rubber sealing strips of the radiator are still firmly attached and properly seal the edge of the large protective cover.
- Make sure that chippings do not remain on the exhaust as this could pose a fire risk or continue to smoulder after the machine has been turned off.
- There are two small holes at the bottom of the collector to eliminate any water and fine dust that is not eliminated by the Axelero™. These holes may get clogged. In such case, stick a pin through these holes to clear them.
- A steamer may be used for cleaning, Do not spray excessive amounts of water on the bearings, electric components, dashboard and filler caps. Be particularly careful with water on the back of the dashboard. Pressurised water can penetrate the electrical unit and cause short-circuits. Moisture can also lead to erosion and, in turn, faults in the electrical system. Water is known to be the main cause of corrosion and must, therefore, be avoided at all times
- A washing out of the lubricant is possible ; for this reason, plan a lubrication task after thorough cleaning.
- The engine manufacturer does not recommend water cleaning.
- Before storing the machine, completely clean the feed hopper but also the chipping chamber and Axelero™ chamber The acidic juices of some chippings can affect the paint but also bare metal rust oxidize faster.

11.4 General interventions



Warning :
If the protective covers need to be opened or removed to carry out maintenance, these must always be replaced in their original position and, if possible, locked afterwards for your own and bystanders' safety.



Caution :
Most of the actions below form part of several maintenance tasks. Over time, these will become a routine, as a result of which you may start paying less attention when performing them, which could lead to negligence when it comes to safety. Therefore, you must always be sure to apply the safety measures, for yourself as well as third parties.

11.4.1 Opening the protective covers



Warning :
When opening the protective covers, you will be exposed to the hazards hidden behind them. So always be attentive and wear suitable protective clothing, such as gloves, safety glasses and head protection.

Fold the lever up and turn it a quarter turn to unlock the protective cover. Then pull the lever towards you to tilt the protective cover upwards. A gas spring will help compensate the weight of the cover. The covers will also stay up in the open position thanks to the gas springs.

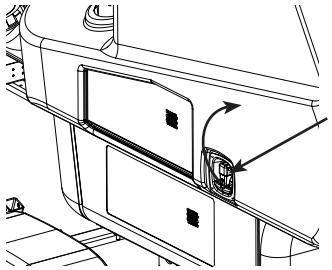

Hold the cover and let it turn open in a controlled manner until it has reached the highest position. Prevent the gas spring from releasing the cover with full force and speed against the end stop.

The machine comes with a key to lock the protective covers.

As soon as the protective covers are opened, a safety switch will turn off the engine.

If you notice that the engine is not turned off, stop the machine immediately and consult your dealer to fix this problem.
Do not use the machine as long as the safety mechanism does not work correctly.



Caution :
Underneath the open protective covers there is a free space of 154 cm. So be careful not to hit your head, as this may cause injury. You are advised to wear head protection.



Caution :
If you notice that the protective cover does not stay in the upright position and partly folds down again, this means that the gas springs that compensate the weight of the covers and keep them open have lost their strength and need to be replaced.

After an intervention the protective cover will need to be properly closed again.
When closing the protective cover, you should always hold the door handle and lower the cover in a controlled manner. Always turn the door handle into its vertical position.
Once the cover has been closed, turn the door handle into its horizontal position again to lock it.
Briefly pull on the handle to check that the protective cover has been properly locked.
Now fold the handle down; this way, the protective cover will be pressed against the machine so that it fits tightly.
If you notice that this does not occur, the locking system may be incorrectly adjusted or a part of it may have come loose. This should be checked and remedied immediately.
To adjust this, move the lever plate at the back of the handle a little closer to the protective cover. To do so, fold the locking tab back up so that you can loosen the lock nut (spanner size 18, counter-clockwise). Now turn the nut between the lever plate and the protective cover a few more mm towards the cover (clockwise). Move the plate and tighten the lock nut again.
Now check whether this adjustment has solved the problem. If not, repeat the steps above until it does.
Once you have adjusted everything correctly, tighten the lock nut and secure it by folding one of the locking tabs back against a flat side of the lock nut. This way, the nut cannot come loose as a result of vibration.

11.4.2 Removing the ventilation grilles

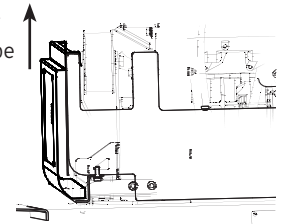

As an extra protection and to keep out dirt, a ventilation grille is provided at either side of the machine. This ventilation grille can only be removed after opening the large protective covers.
To remove these grilles, you can move them out of their position by lifting them up.

To put a ventilation grille back into place, you must first place the protruding tabs in the corresponding slots. After that, lower the grille until the tab at the top can be attached to the edge.
Always replace ventilation grilles before closing the large protective covers again.

11.4.3 Disconnecting the battery



Warning :
Never disconnect a battery with a running engine. In order to be able to access the battery easily, open the right-hand protective cover. Take into account the safety precautions ("Read §11.4.1 Opening the protective covers" on page 63")



Caution :
The battery is located near the exhaust collector, so let the engine cool off sufficiently. This way, the risk of burns on contact with hot engine or exhaust parts can be avoided.

There is a general colour code for battery wires that is applied in machine construction:
Red = positive pole
Black = negative pole



Caution :
Before connecting or disconnecting the battery, always turn the ignition key to OFF and remove the key from the ignition. Failure to do so may cause damage to the electronics of the engine or the machine.



Caution :
When connecting the battery, you must FIRST connect the POSITIVE POLE (red wire) and THEN the NEGATIVE POLE (black wire). Never disconnect the battery longer then one day.

When disconnecting the battery, you must FIRST disconnect the NEGATIVE pole (black wire) and THEN the POSITIVE POLE (red wire).
When connecting the battery, you must FIRST connect the POSITIVE POLE (red wire) and THEN the NEGATIVE POLE (black wire).

Make sure the battery wires cannot cause a short circuit at any time. This could seriously damage or interfere with the electronics of the machine or the engine.
Make sure that the battery clamps have been tightened firmly before starting the engine



Caution :
To charge the battery you must always turn the ignition key to OFF. Release the negative battery clamp and start charging.



Caution :
When performing welding on the machine, always set the ignition lock to OFF and disconnect the battery.



For your information:
If you disconnect the battery for longer than 1 day, the date and time setting of the machine will be lost. After the battery has been connected again, the date and time will need to be set again. Other information, such as the time registration, the maintenance schedule, etc. is stored in the memory and is not lost when the battery is disconnected.

11.4.4 Opening the Axelero™ chamber



Caution :
Before opening the maintenance hatch that provides access to the Axelero™ chamber, make sure that the engine has been turned off and the key has been removed from the ignition.



Warning :
When switching off the petrol engine or disengaging the coupling, it may take up to 5 seconds before the Axelero™ comes to a complete standstill

Warning :
When you open the maintenance hatch, you are exposed to the hazards posed by the blades. So always be attentive and wear suitable protective clothing: gloves, safety glasses and head protection.

Caution :
Before opening the Axelero™ chamber, the blow chute should be put into its working position. The Axelero™ chamber cannot be opened if the blow chute is in transport mode. Read how to put the blow chute into the working position ("Read §10.4.1. Folding the discharge chute in and out" on page 37")

- Push the two locking levers (1) towards one another and hold them together with one hand.
- With your other hand, pull the handle (2) and tilt the maintenance hatch upwards

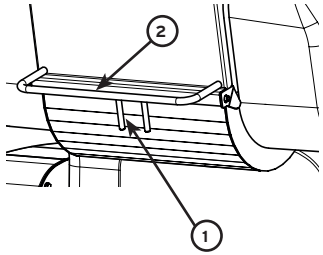

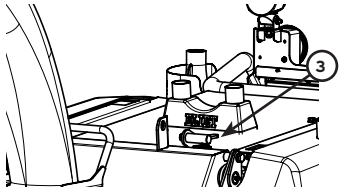

Secure the maintenance hatch using the lock (3); this will prevent the hatch unexpectedly shutting during maintenance and causing injury.

In order to shut the maintenance hatch, the lock must be undone while the handle is held. The hatch is then lowered and pushed against the stopper so that the locking pins secure it in place. Pull the handle once again to make sure that the maintenance hatch is closed properly.

Warning :
Before locking the maintenance hatch in its open position, check whether the lever support and the counter plate are still in good condition and are not deformed or bent. The lock pin must be inserted far enough into the opening of the counter plate to prevent the hatch from closing accidentally during the maintenance work and causing injury. As soon as an anomaly is observed, the necessary repairs must be carried out.

Caution :
When the maintenance hatch is in its open position, there is a free height of Xcm. At the corners there are two protruding guide pieces. Be careful not to hit your head on this hatch. Wear protective head wear as a precaution.

Caution :
After maintenance, before closing the maintenance hatch again, you must always check that no tools or objects have been left in the Axelero™ chamber. These could seriously damage the machine or injure bystanders.

11.4.5 Opening the shredding chamber

Caution :
Make sure the blades have come to a standstill before opening the shredding chamber. Turn the motor off and take the key out of the ignition.

Warning :
When opening the calibration sieve you are exposed to the blades. This involves a real risk of cutting injuries. Be careful and protect yourself with the necessary protective clothing.

- Open the maintenance hatch ("Read §11.4.4 Opening the AxeleroTM chamber" on page 66")
- The sieve that closes off the shredder chamber and shredders that are calibrated to size, comprise two components. An upper sieve and a lower sieve. They are connected together via a hinge.
- The lower sieve is secured to the machine with an axle.
- The upper sieve is clamped into the machine via two tensioning hooks. The tension on the hooks can be eliminated by pulling the black lever (1) towards you.
- Hold the top sieve by its grip with one hand while lifting the hooks from their support with the other hand.
- Then pull the top sieve towards you so that it folds open.
- The upper sieve can be removed from the machine by unhooking it from the hinge with the lower sieve..

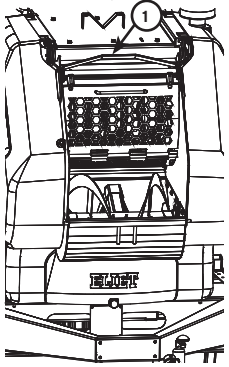

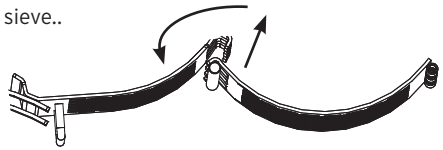

Warning :
The blades are extremely sharp. Avoid contact with the blades and always wear the necessary, appropriate protective gear, such as gloves.

In order to remove the bottom sieve, you need to pull the fixing pin loose. You can get access to the handle of this pin via the right-hand protective cover. Open this protective cover. : "Read §11.4.1 Opening the protective covers" on page 63"



Caution :
You can only remove the bottom sieve after you have removed the top sieve.

- The pin is secured in place by a beta pin (1). Remove this beta pin and pull the other pin out of the machine completely.
- When replacing the calibration sieve, always mount the bottom sieve first.

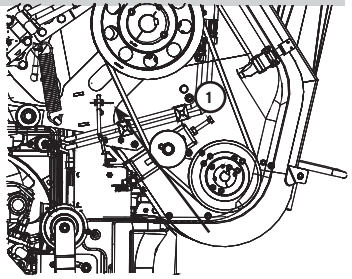



Caution :
When replacing the bottom sieve, always check that the pin has been placed correctly and the sieve is firmly attached. During shredding, the forces on the sieve are quite considerable. A sieve that has not been mounted properly and opens during shredding will cause great damage to the blades and the Axelero™.

- Replace the beta pin to prevent the other pin from coming loose
- Place the top sieve back on the hinges of the bottom sieve and lift up both sieves until they make contact with the upper edge of the chipping chamber.
- Place both hooks in their support and make sure they connect perfectly.



Caution :
Always check whether the hooks are still in good condition and do not show signs of wear or deformation. If this is the case, the hooks will have to be replaced before the next use of the machine.
(Article number : MPA 01 070 400)

- When closing, you must ensure that the hooks are placed in the correct position. When moving the black lever, there must be sufficient tension on the hooks. If this is not the case, the hooks should be adjusted.:
- Use an SLW 13 wrench to undo the locking nut on the threaded end of both hooks. Undo the nuts by a few turns (clockwise) and then both hooks must be turned one rotation in order to test the tension on the lever. If this is insufficient, the hooks must be progressively turned until

the tension is adequate. Then tighten the locking nuts securely.

- If it seems, when changing the sieve, that there is too much tension on the lever, the hooks must also be adjusted (undo, anti-clockwise)



Warning :
Shredding is forbidden if the sieve has not been mounted. To prevent this from occurring, the machine is equipped with a sensor that checks that the sieve has been mounted in the correct position. If this is not the case, you will not be able to start the engine of the machine. An error message will also appear on the LCD display. (W06: Check sieve pos).

11.4.6 Lifting the in feed roller manually



Caution :
To lift up the feed roller, you need to open the left-hand protective cover. This will expose you to possible hazards. Always wear suitable protective clothing: gloves, safety glasses, head protection.



Caution :
Before lifting the feed roller, you always have to turn off the engine and remove the key from the ignition.

For certain maintenance tasks, or if the blade axle is stuck, it may be necessary to lift the feed roller manually. In order to make this possible for a single operator without help, a special lifting tool is provided with every machine.
(Article number : MPA 01 441 220)

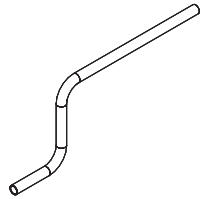

Do the following to raise or lower the feed roller:

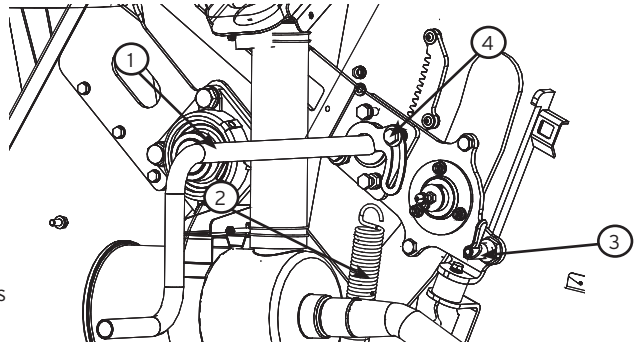

- Open both protective covers of the machine.
- If possible, disconnect the springs (2) on both sides of the feed roller. This way, you avoid having to lift the roller against the tensile force of the springs.
- Turn the lock pin (3) so that the pin moves outwards and the feed roller can be clicked into place in its highest position.
- Place the lifting tool (1) in the specially provided hole in the left arm of the feed roller. To be able to insert it, you will need to turn the securing plate (4) upwards. Make sure the teeth of the gear wheel at the end of the lifting tool mesh with the gear rack on the machine, and the cylindrical part is inserted as far as possible into the plastic sliding bearing.

- Once the tool has been placed correctly, turn the securing plate back down so that the lifting tool cannot slide out of position during the lifting process
- Turn the lever of the tool clockwise to lift the feed roller. Keep turning the lever until the feed roller is locked in its highest position.



Warning :
Remove the lifting device during maintenance work. Make sure that no unauthorised persons get access to this lifting device during maintenance work, to prevent the feed roller from accidentally dropping and causing serious injury.

Before lowering the feed roller again, replace the lifting device as described above.
First turn clockwise to lift the roller a little further. This will take the pressure of the roller from the locking pin, making it easier to remove this pin. With one hand, hold the turning lever in the right position while loosening the locking pin with the other hand.



Caution :
Stay attentive and make sure you always keep control of the lifting tool and do not let it go. If the lever is released, it may move in an uncontrolled manner and hit the operator, causing serious injury.

Then turn the lever of the lifting tool counter-clockwise in a controlled manner and lower the feed roller until it rests in the lowest position again.



Warning :
Attach the springs again and make sure the lock is not in the 'off' position when you start shredding again. The lever could accidentally lock the feed roller in the highest position during the work, as a result of which the waste would be fed into the hopper in an uncontrolled manner.

11.5 Engine maintenance



Below is a description of the maintenance of the engine built into this shredder and for use in a shredder. This description is purely informative and complements the description and recommendations in the maintenance manual of the engine manufacturer. In case of doubt or contradiction, you must always follow the instructions in the manufacturer's manual for the engine.

11.5.1 Checking the oil level in the engine crankcase

In the event of a great lack of oil being detected in the engine, the electronics on the machine reverts to the safety mode and switches the engine OFF. Of course, the machine will then have already operated for a long time with insufficient lubrication. To prevent this, regular checking of the oil level is of paramount importance.

- Park the machine on a level surface so that the engine is perfectly horizontal.
- Let the engine cool down for 15 minutes
- Take a clean cloth
- To get access to the area where the dipstick is located, open the right-hand protective cover. ("Read §11.4.1 Opening the protective covers" on page 63")

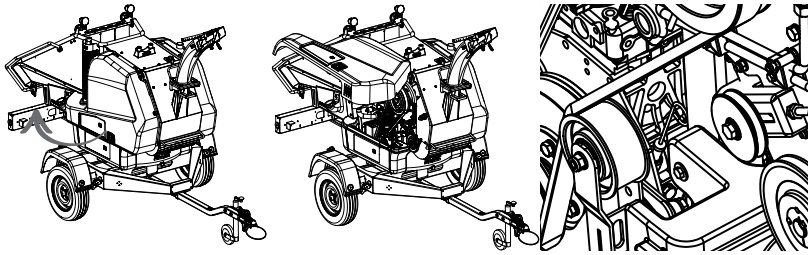



Caution :
Always turn the engine off when checking the oil level. To ensure a correct measurement, it is important to let the engine cool off for at least 30 minutes to allow all oil to flow back into the oil pan.

A dipstick is provided to measure the oil level. You can find this:

A. In a shredder equipped with a Kubota D1105T diesel engine a dipstick is provided near the flywheel on the right-hand side of the engine block.
B. In a shredder equipped with a Vanguard 37 hp EFI petrol engine a yellow dipstick is provided near the left-hand valve cover of the engine block.

- Remove the dipstick from the tube and clean it with a piece of kitchen towel. Insert the dipstick into the crankcase and then remove it. The oil level must reach the upper mark.
- If this is not the case, then the oil must be topped up (Caution : Do not top up with too much oil!).

11.5.2 Topping up the engine oil



Caution :
Before refilling the engine oil, you must always turn off the engine and remove the key from the ignition.

To get access to the area where the dipstick is located, open the right-hand protective cover.
("Read §11.4.1 Opening the protective covers" on page 63")
You will always have to clean the area around the fill cap to avoid dirt entering the engine.



Caution :
To refill the oil, you must always let the engine cool off for a while first to avoid burning yourself on hot engine parts. Always wear gloves to refill the oil.

You can find the oil fill cap:

A. In a shredder equipped with a Kubota D1105T diesel engine, the large fill cap is located at the top of the long cam cover. The cap can be screwed off manually.
B. In a shredder equipped with a Vanguard EFI petrol engine, the large yellow fill cap is located at the centre of the valve cover of the left-hand cylinder. The cap can be screwed off manually.

To refill the oil without spilling, it may be useful to use a funnel with a long stem.



- Before topping up the oil, first remove the dipstick so that ventilation is still possible in the crankcase
- Only top up with the recommended oil.

Gently replenish the oil reservoir. Regularly check the oil level on the dipstick (to see when the desired level has been reached).



Caution :
Overfilling with oil is harmful to the functioning of the engine. If the oil level measurement shows that too much oil has been added, you will need to drain part of the oil in a controlled manner. . §"Read §11.5.3 Changing engine oil" on page 75"

Immediately clean away any spilled oil.

11.5.3 Changing engine oil

It is advisable to change the engine oil regularly. Both with the diesel engine and with the petrol engine, the engine oil should be changed every 100 hours (or every six months). The procedure to be followed is:

- Park the machine on a level surface so that the engine is perfectly horizontal
- Allow the engine to run until the oil is not too thick; then switch OFF the engine



Let op:
A hot engine poses a risk of burns. Contact with hot engine oil can also be dangerous. Always wear gloves

- The oil drain plug is often located at the lowest point of the engine:
  A. In the Kubota diesel engine, the oil drain plug is located at the bottom of the oil pan at the side of the fan blade. This location is easily accessible from the bottom of the trailer. The cap can be screwed off using a size 22 open-end wrench.

  B. In the Vanguard petrol engine, the oil drain plug is located on each side of the engine base. To reach it, you need to open the left-hand protective cover and take away the ventilation grille. ("Read §11.4.1 Opening the protective covers" on page 63" and "Read §11.4.2 Removing the ventilation grilles" on page 65")

- Place a 5 litre / 1.32 US gallon container underneath the machine
- Make sure that you always have a rag or a piece of paper at hand so you can immediately clean up any spilled oil.
- Let all oil drain from the engine block. It may take some time before all oil has drained away from the engine.
- In order not to create any negative pressure in the oil pan during the draining process, which would slow it down, pull the dipstick out.
- Once all the oil has drained away, replace the oil drain plug.

- The collected engine oil must be taken to an authorised processing company or collection point to be recycled.
- Then fill the engine again with fresh engine oil. The volume of oil needed is approximately 4 L / 1.056 US Gallon. "Read §11.5.2 Topping up the engine oil" on page 74".

- Allow the machine to idle for 5 minutes
- After 5 minutes, recheck the oil level. If necessary, top up the oil
- Remove any spilt oil and check the engine for leaks.



Warning :
Insufficient oil in the engine can cause irrevocable serious damage to the engine

11.5.4 Renewing the oil filter

Change the oil filter every second time you change the oil, or after every 200 operating hours (annually).
Drain the oil first, and only remove the oil filter when all oil has been drained from the engine.

You can find the oil filter:
A. In a Kubota diesel engine, the oil filter is at the front left near the fan blade. To reach this filter, you need to open the left-hand protective cover and remove the ventilation grille. ("Read §11.4.1 Opening the protective covers" on page 63")
B. In a Vanguard petrol engine, the oil filter is located at the right-hand side of the engine block on the side of the crankshaft. To reach this filter easily, you need to open the right-hand protective cover and remove the ventilation grille. (("Read §11.4.1 Opening the protective covers" on page 63" and "Read §11.4.2 Removing the ventilation grilles" on page 65")

After the first use, change the oil filter after 50 hours of use, and then make it a habit to change it with every second oil change
(Frequency: every 200 hours).
- Clean the area around the oil filter.
- Place a tray underneath the filter.
- Then unscrew the oil filter. It may be necessary to use a suitable wrench (consult your authorised dealer).
- Apply a film of new oil to the sealing gasket of the new filter. Check the condition of the sealing ring.
- Tighten the new filter until the seal touches the filter adapter.
- Now tension it fully by turning it a further half to three-quarters of a turn
- Add the recommended amount of oil in the manner described above ("Read §11.5.3 Changing engine oil" on page 75").
- The collected engine oil must be taken to an authorised processing company or collection point to be recycled.

11.5.5 Cleaning the air filter

The engine takes in air at the top of the left-hand protective cover. Always check that no dirt has accumulated in the protective cover, obstructing the air intake.

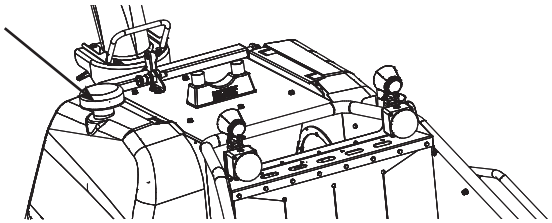

In order to be able to access the air filter, open the left-hand protective cover. ("Read §11.4.1 Opening the protective covers" on page 63")



Caution :
When opening the protective cover, you will be exposed to possible hazards shielded by this cover. You must therefore always turn the engine off before opening the cover, be careful and alert, and wear suitable protective clothing.

- The air taken in flows to the air filter through a flexible tube that is connected to the intake opening in the protective cover. To guarantee proper sealing, elastic foam is provided. Check whether this elastic foam still perfectly connects to the protective cover. Also check that there is no dirt in the intake tube.
- The air filter consists of a filter cartridge made of layered paper. This is located inside a housing. Small dust particles stick to the filter cartridge, while larger particles fall into the housing and gather at the lowest point.
- In order to be able to remove these larger particles quickly, a rubber valve is provided. When you squeeze it, the valve opens and the particles fall out.
- To clean the filter cartridge, you will have to open the housing:
  A) In the diesel engine, there is a lid on the left-hand side of the housing that is screwed on with a wing nut. The filter cartridge is attached to the lid and is removed from the housing in one piece.
  B) In the fuel engine, there is a lid on the left-hand side of the housing that is attached with two spring clamps. The lid can be removed by opening the clamps. You can now remove the cylindrical filter cartridge from the housing.
- To get the dust particles out of the filter cartridge, you can beat them out. To get the most difficult particles out, you can use compressed air. Always blow from inside to outside. Avoid coming near the filter paper with the blower nozzle.
- The powerful blast could cause micro-cracks which could jeopardise the proper functioning of the filter.
- To get the dust particles out of the filter cartridge, you can beat them out. To get the most difficult particles out, you can use compressed air. Always blow from inside to outside. Avoid coming near the filter paper with the blower nozzle.
-

11.5.6 Renewing the air filter

These actions are almost identical to cleaning the air cleaner ("Read §11.5.5 Cleaning the air filter" on page 77"). The only difference here is that the cartridge is replaced.
New air cleaners of the correct type are available from your ELIET Dealer or from an authorized Briggs & Stratton or Kubota service centre..

11.5.7 Emptying the water separator (only for Kubota diesel version)

- To empty the water separator you will always have to turn the engine off.



Caution :
Let the engine cool off long enough to avoid burning yourself on hot engine parts.



Warning :
Fuel is flammable. It is strictly prohibited to empty the water separator near an open flame.

- To reach the water separator, you need to open the right-hand protective cover. ("Read §11.4.1 Opening the protective covers" on page 63")

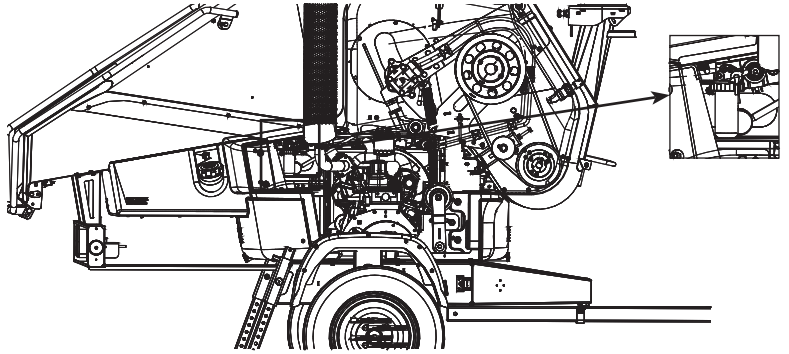

- A water separator is provided in the fuel feed pipe. This will separate the water from the fuel and collect it in a small transparent reservoir.

- To indicate the level of the water collected, a red float is provided. When the float reaches the maximum level (indicated by a white line and the words 'drain water'), the water separator must be emptied:
- A stopcock is provided on the fuel feed pipe. Turn this stopcock to OFF to prevent fuel from draining away when you empty the separator.
- Take a tray to collect the water.
- Unscrew the reservoir (clockwise). Hold the tray underneath the reservoir to collect any fuel.
- Pour the contents of the reservoir into the tray.
- Screw the empty reservoir back on.
- Turn the stopcock of the fuel pipe back to ON.

11.5.8 Renewing the fuel filters

Always turn off the engine to replace the fuel filters.



Caution :
Let the motor cool down sufficiently in order not to burn yourself on hot engine parts, and to prevent the danger of explosion or ignition of fuel.



Warning :
Fuel is flammable. It is strictly prohibited to change the fuel filter near an open flame.

To reach the fuel filters, you need to open the right-hand protective cover. (''Read §11.4.1 Opening the protective covers'' on page 63'')

A) In the diesel engine there are two fuel filters:

a) A small plastic pre-filter which is located immediately next to the water separator. Its function is to filter out major dirt. This filter must be replaced annually.
- Close the stopcock on the water separator.
- Take a tray to collect any leaking fuel.
- Then loosen the screw on the lock rings so that these can be moved on the fuel hose. Disconnect the tubes from the fuel filter.
- When placing a new filter you need to position the arrow on the body of the filter according to the flow direction of the fuel through the tube.
- Place the lock rings back where the tube and the filter overlap and tighten them so that there are no leaks.

b) A large filter cartridge intended to filter the smallest particles out of the fuel. This filter cartridge must be replaced every two years
- Close the stopcock on the water separator.
- Take a tray to collect any leaking fuel.
- Unscrew the cartridge (counter-clockwise).
- Before placing a new filter, moisten the sealing ring of this cartridge with a little fuel.
- Then screw the new cartridge on tightly with your hand.
- After placing the filter, open the stopcock on the water separator again.

B) In the petrol engine there is only one fuel filter. This is a small plastic filter mounted on the suction line just before the fuel pump. This filter must be replaced annually.
- Position a pair of locking pliers about 10 cm / 3 15/16 inch before the filter to squeeze the hose and cut off the fuel flow.
- Take a tray to collect any leaking fuel.
- Then loosen the screw on the lock rings on each side of the filter so that these can be moved on the fuel hose. Disconnect the tubes from the fuel filter. When placing a new filter you need to position the arrow on the body of the filter according to the flow direction of the fuel through the tube. Place the lock rings back where the tube and the filter overlap and tighten them so that there are no leaks.

When starting the engine, keep an eye on the supply hose and check for possible leaks. If necessary, tighten the filters a little more.

11.5.9 Topping up the cooling liquid (only for water cooled diesel engine)

To carry out this maintenance, you must always turn off the engine and remove the key from the ignition. Let the engine cool off for a while.
To reach the expansion vessel of the coolant, you need to open the left-hand protective cover.
(''Read §11.4.1 Opening the protective covers'' on page 63'')



Caution :
When opening the protective cover, you will be exposed to possible hazards shielded by this cover. Wear suitable protective clothing.

The diesel engine is cooled by water. When the engine is running, the liquid that flows through the cooling circuit has an operational temperature of 80 till 90°.
A small reservoir next to the cooling circuit supplies extra liquid to compensate for evaporation. You must regularly check the level of this extra liquid and, if necessary, top it up.

The level of coolant in this expansion vessel must never drop below the minimum (MIN) indication.
If necessary, refill with distilled water or a liquid suitable for cooling, which can be obtained from the authorised service dealer.

Make sure no dirt enters the expansion vessel when you open the fill cap. .
Top up the reservoir to the “Max.” mark



Warning :
Wait until the engine has cooled down completely before removing the radiator plug.

11.5.10 Cleaning and lubricating the throttle cables

To reach the throttle cables, you need to open the right-hand protective cover. (“Read §11.4.1 Opening the protective covers” on page 63”)



Caution :
For this maintenance you need to reach in the engine compartment. Let the engine cool down sufficiently so that there is no risk of burns. Wear protective clothing as a precaution.

The control buttons where one can modify the rpm of the engine, engage an electromagnetic plunger (1) that commands by means of the throttle cable the throttle lever (2) on the engine. This electromagnetic plunger is mounted on a vibration damped support, fixed on the bottom side of the feed hopper.

The plunger pulls a cable that is guided through a cable guide, to reach the mechanical throttle lever on the engine.

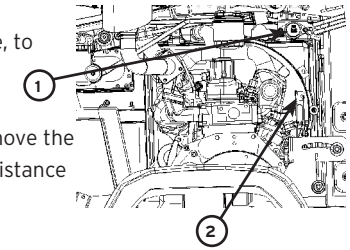

In order to have a sufficient pulling power of the plunger to move the cable and the throttle lever, it is essential this cable slides resistance free in its guidance; This means:

1. The cable guide should follow a route with a nice curves, with a minimum number of bends and kinks.
2. Avoid pollution or corrosion inside the cable guide
3. Provide adequate and regular lubricant in the housing so that the friction with the cable is minimal.

Check regularly if all points above are still correct.
Clean the outer ends of the cable guide regularly, to avoid accumulation of dust that enters the cable guide.
Spray regularly with penetrating oil (MoS2 based) in the top of the housing so that it can penetrate inside the housing and lubricate this cable guide.

English

11.6 Machine maintenance

11.6.1 Routine check of the blades

Sharp shred knives will give the machine optimum performance and provide maximum operating speed. Enhance your own work comfort by taking some time to check the blades, and if necessary, sharpen them..

SHARP BLADES = OPTIMUM PERFORMANCE

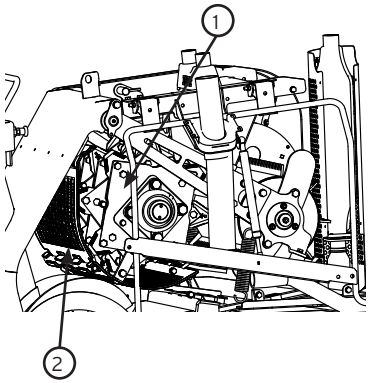

Pay particular attention to the following: Shredding garden waste with the ELIET shredding system takes place in two steps. We first have the contact of the blades with the garden waste when chopping takes place where the cutting block can be found. The wood and green material is roughly cut into pieces until large irregular chippings are obtained during this **primary shredding (1)** These large chippings end up in the shredding chamber where they are finely chopped to produce small chippings. This **secondary shredding (2)** will continue until the chippings are considered to be small enough to pass through the openings in the sieve screen or as soon as they're small enough to be ejected. Each of these shredding actions set certain criteria that the blades must meet for an optimal shredding efficiency:

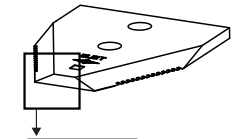

The top of the blade, in particular, is important with regard to the primary shredding

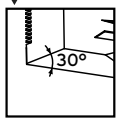

Since the blades act as splitting blades, the **cutting angle** is essential because this forms the key that will cleave through the wood. The cutting angle of the cutting edge of the blade is by preference 30°. The sharper the blade edge, the less resistance when splitting and the smaller the cutting impact on the structure. This will produce significantly fewer vibrations and noise. This will also benefit the load on the blade shaft and the bearings. You can ensure that the cutting angle is the best possible at all times by regularly grinding.

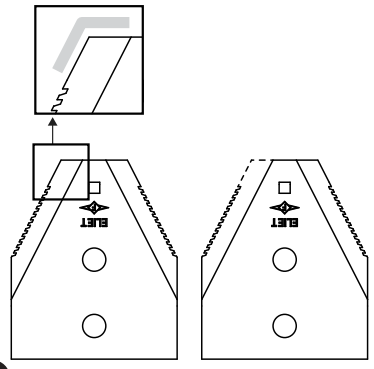

On the other hand, the **form of the top of the blade** is of essential importance for the performance and the speed of this primary shredding. The angle of the top of the blade will determine the angle at which the wood is pulled inside the shredding chamber. If this angle is rounded off due to wear,

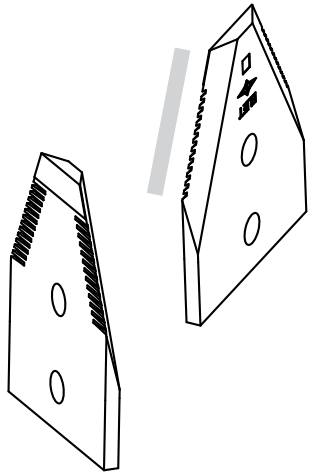

turn the blades around or replace them.

B) The issue is to have the chippings leave the shredding chamber as quickly as possible with regard to the secondary shredding. The chippings, therefore, must be quickly reduced until they are small enough to pass through the openings of the sieve screen. Every contact with the cutting area of a blade must make the individual chipping smaller.. **The sharper the full active cutting edge of the blade, the more efficient the shredding will be .** Regular grinding of the cutting edge is essential. The **teeth on the cutting edge** ensures that the cutting power of the blades increases and the cutting edge remains sharp for a longer period of time. It is very important to never grind away the teeth when performing maintenance on the blades.

The position of the blades on the blade shaft has been selected very specifically to obtain a alternative chopping configuration with regard to the primary shredding and the correct circulation of the chippings in the shredding chamber with regard to the secondary shredding. Always observe the original set-up of the blades when reversing or replacing them.

11.6.2 Sharpening the blades

Correct and timely sharpening of the shredding blades will extend their operating life (We recommend at least every 10 working hours).

Preparatory warnings

- Always wear safety glasses and hearing protection when grinding blades. Gloves are also mandatory for performing the maintenance work
- NEVER turn the blade shaft by grabbing the blades. Use the Axelero^{Mt} to turn the rotor
- The blade has two cutting edges (reversible blade). This means that you must take into account when sharpening that there is another razor-sharp blade side.
- Remove all wood dust and chipping residue from the shredding chamber, around the blade shaft and from the Axelero^{TM} chamber. This to ensure fire cannot occur once glowing sharpening fillings is deposited.
- Remove the key from the ignition for your own safety
- Open the shredding chamber ("Read §11.4.5 Opening the shredding chamber" on page 68").



For your information :
The blades can be sharpened without having to disassemble them. Use a small angle grinder with a grinding disc suitable for steel.

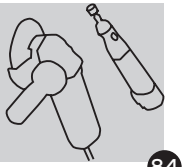

A blade has two sides:
- The front of the blade has the two chamfered cutting edges. (V)
- The rear clearly shows the teeth profile of the cutting area (A)

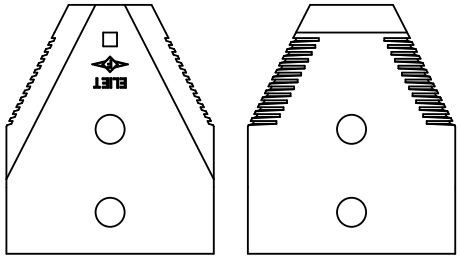

(V) **(A)**

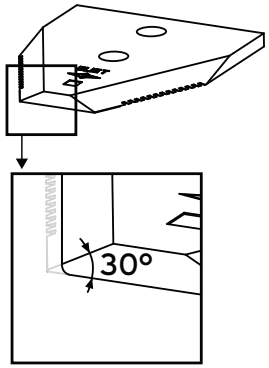

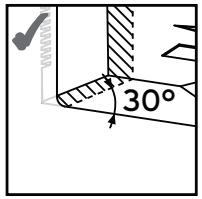

A sharp cutting edge and a correct cutting angle are essential for efficient shredding. These two properties of the blades are retained in position by correctly sharpening the blades
- If blades become blunt, the sharp cutting edge will become worn and will be upset to form a wider rib. **(1)**
- By grinding a little metal from the cutting edge, you can again obtain a sharp cutting edge from this wide rib **(2)**
- This grinding is performed by moving the grinding disc along the angled cutting edge.
- Note: By regularly grinding, you will only have to only grind away a small adjustment of the metal to again obtain a sharp cutting edge. This ensures that the times that you grind will be very short and will ensure that you always work with the best possible cutting edge. (ELIET recommends grinding every 10 working hours.)
- Avoid grinding at the same location for a longer period of time. Prevent local discolouration of blades; this denotes heating that causes the material structure to change locally and the hardness to decrease..
- It is extremely important that the existing cutting angle be respected when grinding. **(3: badly grinded blade)**
- If the cutting angle is not maintained, blades will be stopped in the wood due to a blunt angle **(4)** of an interrupted cutting angle **(5)** and a lot of power will be lost. A cutting angle that is too sharp **(6,7)** will weaken the cutting edge and, therefore, the blade life of the blades will be significantly shortened **(see pictures 4,5,6 and 7)**.

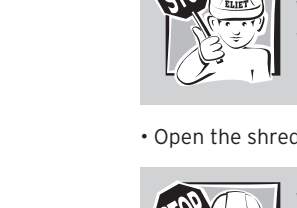



(4) (5) (6) (7)

- Never grind the rear side of a blade. In the case of RESIST/10™ blades, the profile is on the rear side. If you grind away the teeth, the blade will lose a great deal of its cutting force.
- The top of the blade is subjected to the heaviest loads during shredding. Sharpen this as little as possible so that it is not weakened
- Every time you grind you remove some material and the blade will become smaller on the active cutting side. You can continue to grind until you have reached halfway through the width of the top of the blade.
- Should you continue to grind, you would compromise the blade life of the cutting side that has not yet been used. Turn the blades when this happens (“Read §11.6.3 Reversing and renewing the blades” on page 86”).
- If the top of the blade is rounded-off, the shredding efficiency will be reduced. In this event, further grinding of the blade serves no purpose. This is the time to reverse or renew the blades. (“Read §11.6.3.2 To replace the shredding blades, proceed as follows:.” on page 89”).
- Carefully close the chipping chamber after grinding.

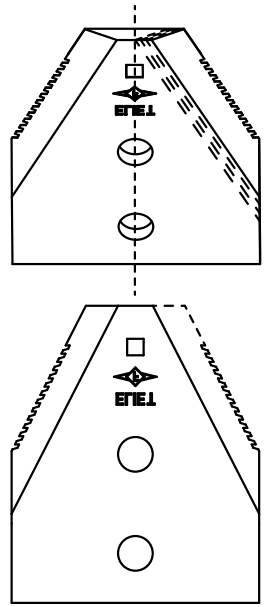

11.6.3 Reversing and renewing the blades

If blades are sharpened at regular intervals, a blade life in excess of 100 hours for each blade edge can be realised. When one blade edge has reached the end of its service life, simply reverse the blade, thereby enabling the machine to operate for another 100 hours. If both blade edges are worn, replace the blade as a set.

11.6.3.1 To reverse a shredding blade, proceed as follows

Warning :
Wear protective gloves as the blades are razor sharp!

- Open the shredding chamber (“Read §11.4.5 Opening the shredding chamber” on page 68”)



Warning :
The blades are directly exposed as soon as the shredding chamber is open. Be sure that the machine has completely stopped and remove the key from the ignition.



For your information:
The blades are extremely sharp. Avoid contact with the blades en always wear protective clothing.

- Each blade is secured with two M10-bolts. Avoid injury to hands and always use two ring spanners with long handles to unscrew the bolts. (Wrench size 17)
- Immediately replace any damaged bolts
- Do not pull away the blades using your hands but use a self-grip wrench.
- It is useful to put a wedge (screwdriver) in-between the blade disks to ensure it is easy to release them.

There are a few rules that must be respected for reversing or replacing the blades. The blade shaft has been divided into two groups for the logics of these rules

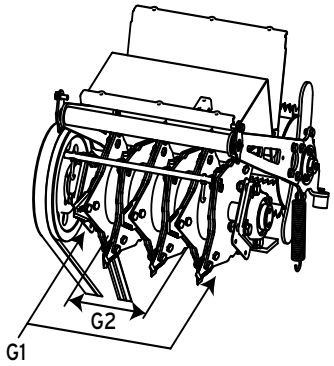

Blade group 1 : The two farthest blade disks belong to this group. **(G1)**
Blade group 2 : This group contains 4 blade disks that are enclosed in-between the two farthest blade disks. **(G2)**

A Reversing the blades of group 1.

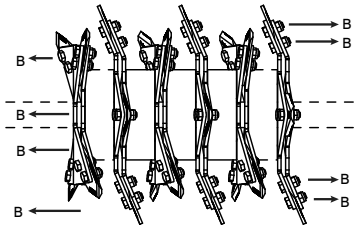

Rule: Ensure that the blades from blade group 1 are always facing with their back side (B) towards the side walls of the shredding chamber..

Perform the following steps to consistently apply this rule:

- Remove a blade from the left-hand side, rotate it through 180° and fit it in the same position, but to the right-hand disk. Rotate (180°) the blade previously removed from the right-hand blade disk, and fit it in the empty space in the left-hand blade disk. Repeat this procedure for each blade (8 x) of group 1.
- Always clean the blades and blade holders before reinstalling them.

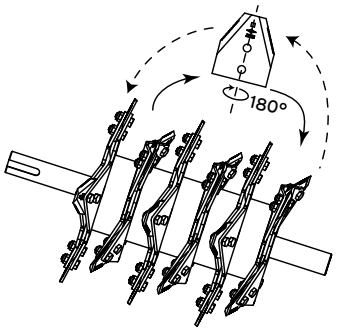

B Reversing the blades of group 2

Rule: Every blade disk has four blade positions. The blades are positioned at an angle for two positions **(1)** and the blades are approximately straight for two positions **(2)** The front side **(V**) of the blade must always be directed towards the axis line of the rotor for the slanted blades. One blade will point **(V)** the front side to the right and the other will point **(V)** the front side to the left for the straight blades..

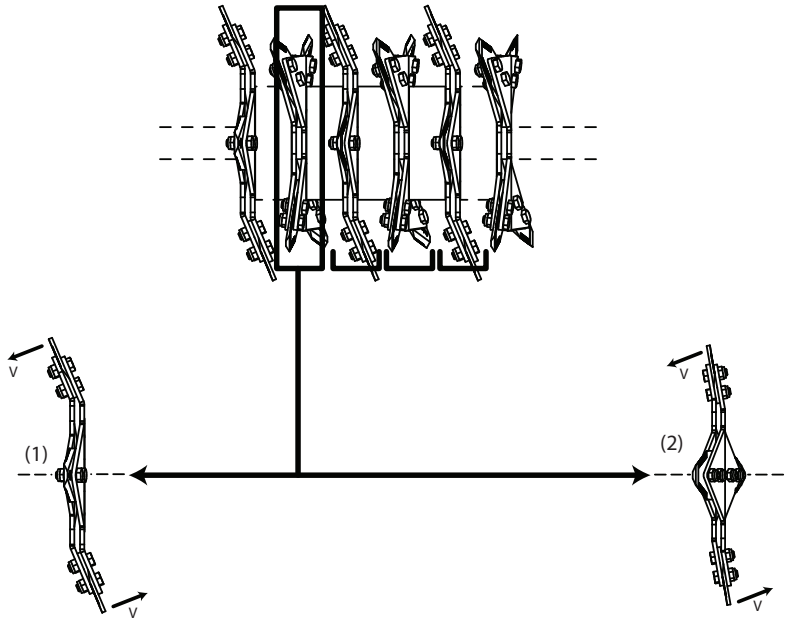

Perform the following steps to consistently apply this rule

- Disassemble two blades that are diametrically opposite each other. Rotate them through 180° and change them over. Do the same with the two remaining blades. Repeat this operation for the three remaining blade disks of group 2.
- Always clean the blades and blade holders before reinstalling them.



Caution :
When fitting the blades, always position the nuts on the left-hand side of the blade plate. By applying this installation method, the nuts will be automatically tightened during shredding by the turning direction of the blade shaft. As a reminder: "Always position the nuts on the belt pulley side"

11.6.3.2 To replace the shredding blades, proceed as follows:.

- The new set of blades, type RESIST/10™ zcan be purchased from your ELIET dealer using the following order number: BU 401 301 000
- Disassemble all bolts (M10) that secure the blades. Always use two ring spanners with long handles to unscrew these bolt attachments.. (Wrench size 17)
- Do not pull away the blades using your hands but use a self-grip wrench.
- It is useful to put a wedge (screwdriver) in-between the blade disks to ensure it is easy to release them.
- First remove any dirt between the blade plates before you insert a new blade. To do so, use a stripping blade.
- Now carry out the steps that must be followed in order to turn the blades:

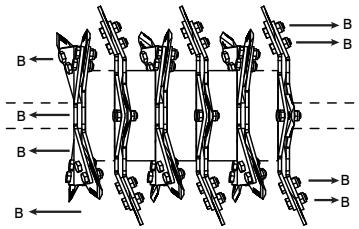

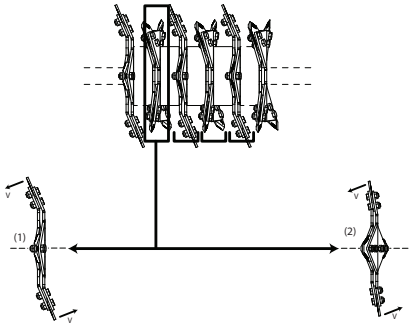

Group 1: Check that the rear of each blade faces towards the wall**(B)** of the shredding chamber
Group 2: Each blade that is mounted on a fluted part of a blade disk must face the axis line of the blade shaft with its front side **(F)**

- On replacing shredding blades, always fit new bolts and nuts.
- When refitting the shredding blades check that all bolts are tight (torque: 69 Nm).
- When refitting the bolts in the discs, always make sure the nut is located on the left side of the disc. As a reminder: "All nuts in the blade shaft must always be positioned along the side of the pulley".
- After reversing or replacing the blades, always check the torque of the blade bolts after the first 5 working hours and adjust, if required



Caution :
- Incorrectly or poorly installed blades may lead to the machine breaking down or being damaged. This will also put operators and bystanders in danger.
- Not re tightening the blades after the first 5 working hours after reversing or changing the blades may lead to the machine breaking down or being damaged.
- The damage and consequential damage that may arise from poor maintenance of the blades will invalidate the warranty.

11.6.4 Checking the tension of the blade shaft drive belt.

To carry out this maintenance, you must always turn off the engine and remove the key from the ignition.
The belt drive is located underneath the right-hand protective cover. Open this cover ("Read §11.4.1 Opening the protective covers" on page 63")



Caution :
Belt drives pose the risk of fingers getting crushed between a tensioned belt and the belt wheel. So always be careful and wear sturdy gloves. Make sure bystanders cannot move driven parts while maintenance is being carried out on the drive.

To check the belt tension, you must press down on the belt with a force of 8 kg in the middle between two belt wheels.
If, under this pressure, the belt is pressed down 1 cm, the belt tension is correct. If it is pressed down any further, this means that the belt tension is insufficient and will have to be adjusted. ("Read §11.6.5 Tighten the blade shaft drive belt" on page 90")

11.6.5 Tighten the blade shaft drive belt

- Before adjusting the belt tension, you must always turn off the engine and remove the key from the ignition.
- Open the right-hand protective cover to access the belt drive. ("Read §11.4.1 Opening the protective covers" on page 63")



Caution :
Belt drives pose the risk of fingers getting crushed between a tensioned belt and the belt wheel. So always be careful and wear sturdy gloves. Make sure bystanders cannot move driven parts while maintenance is being carried out on the drive.

- The belt tension is determined by a large, wide tensioning roller (1), which presses against the wide back of the double belt at the bottom. To increase the tension on the belt, this tensioning roller must be pulled even more tightly against the belt.
- Before starting the tensioning of the belt, check the state of the tensioning roller. If you notice that the roller is worn and a deep track has formed in the tread of the roller, the tensioning roller must be replaced to prevent premature wear of the belt. ("Read §11.6.9 Replacing the bearings for the tensioning roller of the AxeleroTM belt drive" on page 95".)
- Also check whether the bearings of this tensioning roller are still in good condition. Check whether the dust seals are still intact and whether the bearings do not make any noise when they are turning. If you notice any kind of wear, the bearings of the tensioning roller must be replaced as a precaution. ("Read §11.6.8 Replacing the supporting roller and the bearings for the tensioning roller of the rotor belt drive" on page 93")

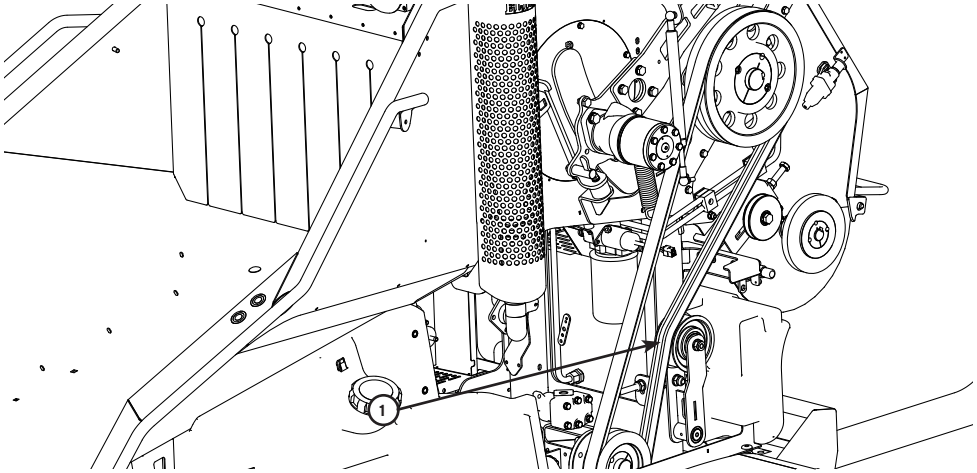

- First you need to move the blue safety roller at the top of the belt a little further from the belt. To do so, unscrew the M12 bolt a little (spanner size 19) so you can push the safety roller up a bit. Then tighten it again.
- To adjust the tensioning roller, a large draw bolt (M10) with a nut and a lock nut is provided.
- Slightly turn the lock nut (M12) counter-clockwise to allow the lever with which the tensioning roller is pressed against the belt to move.
- Unscrew the lock nut M12 (spanner size 19) and then turn the tensioning nut M12 clockwise to move it further up the draw bolt. The tensioning roller is pulled further into the belt and increases the belt tension.
- Always check that no dirt or debris is trapped in the groove between the two belt strings.
- You should also always check the state of the belt. If necessary, replace the belt. (Article number BA 521 324 100)
- Check regularly that the belt tension is sufficient. ("Read §11.6.4 Checking the tension of the blade shaft drive belt." on page 90")
- Adjust the tension if it is insufficient. Repeat the procedure until the correct tension is obtained
- Once the correct tension has been obtained, tighten the lock nut of the tensioning bolt further.
- After that, the lock nut must be tightened (clockwise) so that the belt tensioning device cannot come loose.
- After that, the safety roller must be adjusted so that there is a 1 mm air gap between the safety roller and the belt. Tighten the central tensioning bolt again. Before tightening it, check the state of this roller. Is the tread not too worn? Are the bearings still sufficiently free, are they not making any noise, is there no play on the bearings? In case of anomalies, replace the tensioning roller immediately.
- After tensioning, check the alignment.

11.6.6 Checking the tension of the Axelero™ drive belt

- To carry out this maintenance, you must always turn off the engine and remove the key from the ignition.
- The belt drive is located underneath the right-hand protective cover. Open this cover. ("Read §11.4.1 Opening the protective covers" on page 63")



Caution :
Belt drives pose the risk of fingers getting crushed between a tensioned belt and the belt wheel. So always be careful and wear sturdy gloves. Make sure bystanders cannot move driven parts while maintenance is being carried out on the drive.

To check the belt tension, you must press down on the belt with a force of 5 kg in the middle between two belt wheels.
If, under this pressure, the belt is pressed down 1 cm, the belt tension is correct. If it is pressed down any further, this means that the belt tension is insufficient and will have to be adjusted. ("Read §11.6.7 Tensioning the belt of the AxeleroTM." on page 92".)

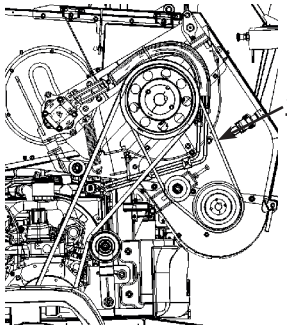

11.6.7 Tensioning the belt of the Axelero™.

- Before adjusting the belt tension, you must always turn off the engine and remove the key from the ignition.
- Open the right-hand protective cover to access the belt drive. ("Read §11.4.1 Opening the protective covers" on page 63")



Caution
Belt drives pose the risk of fingers getting crushed between a tensioned belt and the belt wheel. So always be careful and wear sturdy gloves. Make sure bystanders cannot move driven parts while maintenance is being carried out on the drive.

- The belt that drives the Axelero™ is only a single belt. Contrary to the main drive to the blade axle, the tensioning roller does not run on the back of the belt, but in a V shape.
- Before tensioning the belt, check the state of the belt. Check whether there are no cracks and/or signs of wear on the V shape of the belt. If necessary, replace the belt. (Article number: BA 521 216 440) To replace the belt, you will necessarily need to release the drive belt to the blade

axle in order to place the new belt..

- You will also always need to check the state of the bearings. Check the bearings for damage, play, noise, etc Replace them if necessary before tensioning the belt. ("Read §11.6.8 Replacing the supporting roller and the bearings for the tensioning roller of the rotor belt drive" on page 93")
- While the belt is a little looser, check the bearings of the Axelero™ for possible noise. If you notice wear, you should first replace the bearings of the Axelero™.
- To tension the belt further, loosen the central tensioning bolt (M12) of the tensioning roller a half turn counter-clockwise. (spanner size 19)
- Unscrew the lock nut (M12) on the pressure screw, turning it about 10 times counter-clockwise.
- Now turn the pressure screw clockwise (spanner size 19) to press the tensioning roller more tightly against the belt.
- Check the belt tension regularly during this process, and add tension when it is insufficient. ("Read §11.6.6 Checking the tension of the AxeleroTM drive belt" on page 92".) , Repeat the procedure until the correct tension is obtained.
- Once the correct tension on the belt has been achieved, tighten the lock nut on the pressure screw again so that it cannot come loose during the work.
- After tensioning, also check the alignment again to prevent premature belt wear.
- Close the protective covers.

11.6.8 Replacing the supporting roller and the bearings for the tensioning roller of the rotor belt drive

To carry out this maintenance, you must always turn off the engine and remove the key from the ignition.

To access the tensioning roller (1) and the safety roller (2), you must open the right-hand protective cover ("Read §11.4.1 Opening the protective covers" on page 63")

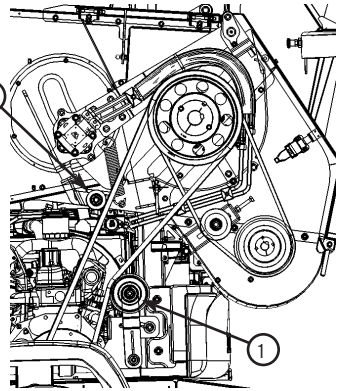

A. Replacing the bearings on the tensioning roller

- To replace the bearings, you need to remove the tensioning roller.
- First release all tension from the belt. This procedure is the same as in "Read §11.6.4 Checking the tension of the blade shaft drive belt." on page 90"
- Now unscrew the nut on the centre bolt of the tensioning roller completely (2x spanner size 19). Remove the bolt so that you can take the tensioning roller out of the holder.
- Check the tread of the belt on the tensioning roller. If a deep track has been formed, it is best to replace the entire tensioning roller.
- This comprises the following parts:
  - 1 x MPA 01 440 250 Tensioning roller
  - 2 x BL 002 505 203 Bearing
  - 2 x BB 002 000 520 Circlips
- The bearings are pressed into the centre of the tensioning roller on each side. When the bearings need to be replaced, these need to be knocked out of the tensioning roller via the axle opening of the other bearing.
- When both bearings have been removed, check whether the circlips against which the bearings are pressed are still in good condition.
- Clean the space in which the bearings are fitted thoroughly.
- When pressing in new bearings, always press on the outer housing of the bearing to avoid damaging it. Distribute the pressure evenly to avoid placing the bearing in an oblique position.
- When mounting the tensioning roller again, place it in the holder with a spacer on each side. This way, the roller will stay in the middle of the holder.
- The centre bolt (M12) which secures the tensioning roller in the holder must be tightened sufficiently, but not too much. This way, you prevent excessive pressure on the bearings. Check whether the roller turns freely without resistance. If necessary, loosen the centre bolt a little.
- After that, increase the tension on the belt again ("Read §11.6.4 Checking the tension of the blade shaft drive belt." on page 90")

B. Replacing the safety roller

- Unscrew the central mounting bolt M12 of the roller. Use two size 19 ring spanners.
- If bearings get stuck or there is too much play on them, ELIET recommends replacing the entire tensioning roller, not just the bearings.
- The order code for a new safety roller is BA 599 006 100. This safety roller is supplied with fittings.
- Its purpose is to dampen excessive vibration of the belt to prevent it from flapping. As a result of the movement of the belt, the tread of this roller is touched continuously. Therefore, it is important that this roller can move freely so that the touching causes only minimal slipping, to prevent wear.
- The safety roller must only be mounted after the belt tension has been adjusted. The safety roller is screwed onto the holder with the supplied spacer. To tighten the mounting bolt (M12), the safety roller must be positioned so that there is a 1 mm gap between the tread of the safety roller and the back of the belt.
- Tighten the centre bolt firmly so that the safety roller cannot come loose during the work.
- Close the protective cover again.

11.6.9 Replacing the bearings for the tensioning roller of the Axelero™ belt drive

- To carry out this maintenance, you must always turn off the engine and remove the key from the ignition.
- The belt drive is located underneath the right-hand protective cover. Open this cover (“Read §11.4.1 Opening the protective covers” on page 63”)
- First remove the tension from the belt drive. Follow the procedure in §”Read §11.6.7 Tensioning the belt of the AxeleroTM.” on page 92” but in reverse order
- Once there is no longer any tension on the belt wheel, it is quite easy to unscrew the central tensioning bolt completely with a size 17 spanner and remove the belt wheel entirely.



Caution :
Be alert when unscrewing the belt wheel to prevent it from falling on the floor. It is made of cast iron and could break when hitting the floor. As soon as the bolt comes loose, the tensioning piece at the back of the holder will fall off, be careful not to lose it.

- Both bearings are pressed into the central space of the belt wheel and rest against a flange. They are kept in place by a circlip.
- First remove the circlip with a suitable wrench. Then press both bearings out of the bearing housing.
- Order number for the bearings: BL 001 203 703.
- When pressing in a new bearing, distribute the pressure on the outer bearing housing evenly to make sure it enters the housing straight.
- When both bearings have been mounted, attach the securing clip in the groove.
- When mounting the belt wheel again, always place it with the securing clip on the side of the holder.
- Slide the tensioning piece into the holder at the bottom and make sure that the ridge fits into the tensioning groove.
- Careful: always make sure when placing the tensioning piece that the cylindrical opening points upwards. This is intended to hold the pressure screw. Before mounting the tensioning piece, apply some grease to this opening.
- Before tightening the fixing bolt of the belt wheel completely, place it with its groove against the belt.
- Then tension the belt again. ”Read §11.6.7 Tensioning the belt of the AxeleroTM.” on page 92”
- Now tighten the belt wheel to the maximum (M12) and close the protective cover again.

10.6.10 Renewing the hydraulic oil

Although the hydraulic system is of the closed type, the oil will become contaminated in the course of time. This contamination is continuously removed by a hydraulic filter. Contamination of this filter will reduce the flow of oil so that cavitation damage can occur. It is therefore recommended to renew the oil and also the filter every 400 hours

- To carry out this maintenance, you must always turn off the engine and remove the key from the ignition
- To get to the red oil fill cap of the hydraulic reservoir, you need to open the left-hand protective cover. (“Read §11.4.1 Opening the protective covers” on page 63”)
- Before opening the oil fill cap, you must always clean the area around the fill cap to avoid dirt entering the oil tank.

- Place a collecting tray (capacity: 30 L / 7.925 US Gallon) underneath the oil drain.
- Position the nose wheel of the machine slightly lower so that the machine tilts backwards. This way, the oil drain plug will be lower, allowing the entire contents to be drained away.
- Open the fill cap to prevent negative pressure in the tank as the oil drains away. This will speed up the draining process.
- Open the oil drain plug (SLW 32 mm) and let the oil run into the tray.
- When the oil stops running, replace the plug.
- Fill the tank again with 15 L / 3.962 US gallon of fresh oil. Use a funnel to fill the oil tank without spilling.
- The oil level must not be higher than 2 cm from the top of the tank.
- Immediately clean away any spilt oil.



Caution :
Prevent dirt and water from entering the tank.

- The collected oil must be taken to an authorised processing company or collection point to be recycled.

11.6.11 Renewing the hydraulic oil filter

The oil filter must only be changed when the engine has been turned off. Give it enough time to cool off to avoid burning yourself on hot engine parts during this maintenance.
The hydraulic oil filter is a cartridge filter. This cartridge is located at the right-hand side of the machine. To access it, you must open the right-hand protective cover.. ("Read §11.4.1 Opening the protective covers" on page 63")



Caution :
When opening the protective covers, you will be exposed to the hazards hidden behind them. So always be careful and wear suitable protective clothing.

- Organise the replacement of the filter cartridge when the hydraulic oil is being changed.
- Take a tray that is large enough to collect the oil that will leak from the pipes when you unscrew the filter cartridge.
- Unscrew the filter cartridge after draining away the oil (use a suitable wrench if necessary).
- Moisten the sealing ring of the filter with fresh oil.
- Tighten the new filter until the seal touches the base of the filter adapter.
- Now tension it fully by turning it a further half to three-quarters of a turn.
- Fill the hydraulic tank via the filler opening up to 2 cm under the neck of the fill cap (capacity: 15 L / 3.962 US gallon).

11.7 General lubrication

In view of the fact that the shredders often operate in extreme conditions, Eliet considers it important to use high-quality materials. ELIET therefore recommends the use of special lubricants from the assembly stage onwards.

The following parts require regular lubrication :

- Pivot points and friction surfaces ("Read §11.7.1 Pivot points and friction surfaces" on page 98").
- Grease nipples ("Read §11.7.2 Greasing via the grease nipples fitted" on page 99")
- Bearing ("Read §11.7.2 Greasing via the grease nipples fitted" on page 99")



Caution :
Before performing lubrication, make sure to switch off the engine and to remove the key from the ignition switch. Gloves must also be worn during this maintenance.

11.7.1 Pivot points and friction surfaces

This group includes the following locations on the machine:

- Pivot points of the safety cover
- Hinge of the safety stop bar
- Hinge points of the deflector
- Throttle control lever pivot point
- Quick-closing sieve screening system
- Sealing plates for the infeed roller.
- Handles for the maintenance hatch
- Spindle for the nose wheel
- Main hinge of the feed hopper and lid of the chipping chamber
- Pivot points of the discharge chute
- Hinge points of the deflector
- Locking lever for the maintenance hatch
- Friction surfaces of the support leg of the trailer
- Friction surfaces of the nose wheel of the trailer
- Gear wheel and gear chain of the starting engine and the engine starting mechanism

Use the following procedure : :

- Whenever possible, disassemble the hinge or the joint
- Spray some penetrating oil containing molybdenum disulphide onto the frictions surfaces and allow the oil to penetrate
- Wipe away all traces of old lubricant and dirt
- In the event of some parts not being accessible, use compressed air to remove all traces of old lubricant and dirt (e.g. in the joints of pivot points)..

- When the pivot points are clean, apply new lubricant
- ELIET recommends Novatio Clearlube as a lubricant for pivot points and ball joints. ELIET would recommend Novatio PFT grease for friction surfaces
- Wipe away any excess lubricant.

11.7.2 Greasing via the grease nipples fitted

This group includes the following locations on the machine :
• Grease nipple on the bearing blocks of the blade shaft
• Grease nipple on the pivot point of feed roller
• Grease nipple on the axis of the belt tensioner

Use the following procedure :
• Clean the grease nipple
• Using a suitable grease pump, apply new grease.
• ELIET recommends Sunoco Multi Purpose Grease.
• Pumping the grease gun one or two times is sufficient to distribute the grease.
• Wipe away any grease that comes out of the joints.



Caution :
Be particularly careful when pumping new grease into the ball bearings.
The pressure that can build up in a grease gun can break the seals.

11.7.3 Lubricating the bearings

This group includes the following locations on the machine :

- Bearing of the feed roller
- Bearing of the Axelero™ axle

Use the following procedure :
- Spray some penetrating oil containing molybdenum disulphide into the bearing and the area around and allow the oil to penetrate
- Wipe away any external dirt
- Spray more penetrating oil into the bearing joints.
- Allow the bearing to rotate, possibly by starting the drive that moves the bearing. (CAUTION: make sure that all dangerous zones are adequately shielded)
- Once again, wiped away any dirt that is forced out by the penetrating oil..
- Use compressed air to remove all traces of penetrating oil from the bearing and from the bearing joints.
- Apply new lubricating oil. ELIET recommends Novatio ClearLube as a lubricant.
- Wipe away any excess lubricant.

12. Winterizing the machine



When winterizing the machine for long periods, it is recommended to perform the following steps:
• Clean the machine completely (“Read §11.3. Cleaning the machine” on page 61”)
• Carry out routine maintenance (§ “Read §11.2.1 Special maintenance” on page 57”)
• Make sure that no or very little fuel remains in the tank. Remove any excess fuel by pumping it into a jerrycan with a siphon. At the bottom of the tank there is a drain plug. You can unscrew this plug using a size 32 spanner. Be careful not to lose the sealing ring of the drain plug! The maximum capacity of the tank is 40 L / 10.57 US gal . Make sure the collection tray is large enough to collect all the fuel. . (Read the safety precautions “Read §8.3.1 General safety precautions” on page 25”)
• Places where the paint coating is damaged are repainted or covered with grease in order to prevent rust. Original ELIET paints in the same colour are available from your ELIET Dealer
• If you wish to disconnect the battery during long-term storage, read the instructions in “Read §11.4.3 Disconnecting the battery” on page 65”
• Check whether all tank caps have been closed before storage.
• Make sure all protective covers are closed.
• Fold the discharge chute into transport mode.
• Always remove the key from the ignition
• Store the machine in a dry place, protected from rain and sun. If this is not possible, protect it with a tarpaulin.
• Make sure the place of storage is free from vermin that could nest under the protective covers or chew through electric cables.
• Make sure that no water can enter the engine via the exhaust.
• Use the wheel wedges or the parking brake to prevent the machine from rolling off.

13. Equipment specifications

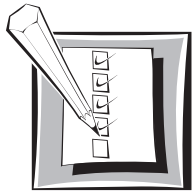

Engine	Kubota D1105	Vanguard™ EFI 'Big Block' 4-cycle, V-Twin
Type	Diesel	Gasoline
Number of cylinders	3	2
Cylinder volume (cc)	1123	993
Emission class	EU Stage III A	EU Stage II a
Power in kW/HP, DIN (rpm)	18.4/25 (3000 rpm)	27.6/37 (3600 rpm)
Max. torque Nm (rpm)	88 Nm (2200 rpm)	73.7 Nm (3400 rpm)
Cooling	Water-cooled	Air-cooled

Capacity of the fuel tank	25 l / 6.604 gallon
Tank volume	electric level indicator (with alert)
Capacity	Max diam. 150 mm / 5 29/32 inch
Shredding technology	ELIET's patented Chopping Principle™
Rotor	Rotor with 24 ELIET RESIST™/10 blades (service life: 200 hours)
Rotor diameter	400 mm / 1 ft 3 3/4 inch
Cutting width	480 mm / 1 ft 6 57/64 inch
Transmission (rotor)	Direct 2 V-belt PowerBand transmission
Feed system	Hydraulic feed roller dia. 300 mm / 11 13/16 inch
Feed speed	Electro-Hydraulic adjustment (on dashboard)
Power control	ELIET ABM = Anti-Block System
Ergonomic feed	Feed height: 800 mm / 2 ft 7 1/2 inch/ Vacuum action from the Axelero™
Feed hopper	One-piece welded hopper (no hinges)
	Feed opening: (h x w): 1000 mm x 650 mm / 3 ft 3 3/8 x 2 ft 1 19/32 inch
	Open feed zone: 480 x 1000 mm / 1 ft 6 57/64 x 3 ft 3 3/8 inch
Simple feed control	LED-illuminated stainless steel push-buttons
Hydraulics tank (volume)	15 l / 3.9625 gallon
Discharge system	Replaceable calibration screen diameter: Ø30 mm / 1 3/16 inch
	Patented Axelero™ System
	Discharge opening height: 2300 mm / 7 ft 6 29/64 inch
	280° rotatable discharge chute
	Adjustable double discharge valves
	Low-noise, corrosion-proof discharge chute
Safety	Large safety collar around feed opening
	Two emergency stop buttons
	Transparent projectile guard
Compact design	(l x w x h) 3500 x 1700 x 2250 mm / 11 ft 5 59/64 x 5 ft 6 59/64 x 7 ft 4 37/64 inch
	Quick-folding discharge chute: reduced height: 1850 mm
	Low center of gravity
	Good weight distribution, easy to move by hand
Low-noise machine	Designed for low-noise operation
	Muffled chipping chamber
	Noise-reduction housing around the engine
	LAeq: 90 dB(A) Lw(A): 115 dB(A)
Wheels	Tires 155/70 R13
Trailer chassis	Spring-loaded axle / Wheelbase 1700 mm - 5 ft 6 59/64 inch / Drawbar length 1300 mm - 4 ft 3 3/16 inch Two stabilizer legs
Parking brake	Brake on jockey wheel + chock
Weight	748 kg / 1649 lbs
Easy maintenance	Each side is fitted with large lockable hinged doors
	Easily removable side cover for quick access to the engine (without tools)
	Secure rear hatch for quick access to the discharge (without tools)
Environment	Eco Eye system
Standard fittings	Hour counter / Tachometer / Job timer / Maintenance alert / Recommended usage system / Diagnostics system
Options	Calibration screen diameter: Ø35 mm - 1 3/8 inch / Calibration screen for moist material / Work lighting / Expanded reflectors / Discharge bucket / *Road lighting with collision absorption (on gasoline model)

14. Appendix

14.1 Technical specifications of the lubricants and oil

English

Engine oil ..... Synthetisch olie SF, SG, SH, SJ
Viscosity ..... SAE 10W30 / SAE 15W40
Content engine carter ..... 5,1 L

Hydraulic oil ..... according to DIN51524 Part 3 HVLP
Viscosity ..... ISO VG46 cST
Capacity of engine crankcase 18L

Reference
SUNOCO ..... Sunvis 846 WR HV
ELF ..... Hydrelf DS 46
SHELL ..... Tellus TD 46
TOTAL ..... Equivis ZS 46
CASTROL ..... Anvol WG 46
TEXACO ..... Rando HDZ 46
MOBIL ..... DTE 15 M
ESSO ..... Univis N46

Lubricant for bearings ..... NOVATIO CLEAR LUBE
Lubricant for pivot point ..... NOVATIO CLEAR LUBE
Lubricant for friction surfaces ..... NOVATIO PTFE OIL
Lubricant for grease zerks ..... SUNOCO MULTI PURPOSE LR EP2

14.3 List of torques

Boutkop vlgs. DIN 931,912 ed.		Sterkte	
	Draad	8.8	10.9
Normale draad	M4	3,0	4,4
	M5	5,9	8,7
	M6	10	15
	M8	25	36
	M10	49	72
	M12	85	125
	M14	135	200
	M16	210	310
	M18	300	430
	M20	425	610
	M22	580	820
	M24	730	1050
	M27	1100	1550
	M30	1450	2100
Fijne draad	M8 x 1	27	35
	M10 x 1,25	52	69
	M12 x 1,5	89	130
	M14 x 1,5	145	215
	M16 x 1,5	225	330
	M18 x 1,5	340	485
	M20 x 1,5	475	680
	M22 x 1,5	630	900
	M24 x 2	800	1150
	M27 x 2	1150	1650
	M30 x 2	1650	2350

(met wrijvingsfactor ↔ = 0,14)

14.4 Dashboard notifications

The following messages may appear on your dashboard, here you will see all messages with their reference to the solution of any problem:

14.4.1 Alarm notifications

If an alarm message appears on the display, it is important to solve this problem first before continuing work with the machine.
After carrying out the necessary repairs or solving the problem, turn the engine on and off. After that, you can press the reset (1) button to remove the alarm message.

F00 - Engine Oil low

If this error message is shown on the display, the oil pressure in the motor is low. Check the oil level of the motor and replenish if necessary. (“Read §11.5.2 Topping up the engine oil” on page 74”).

F01 - Safety cover

If this error message is shown on the display, the protection cover has not been closed properly. Make sure the levers are properly closed.

F02 - Oil pr. sensor

If this error message is shown on the display, there is a problem with the oil pressure sensor. When starting the machine, a check is performed on whether this sensor is working.
If you see this error message, you must contact your distributor.

F03 - Short clutch

This error message indicates that there is a short circuit on the electrically driven coupling. Check to ensure that the counter is still properly connected to the electric coupling. Check all electrical wiring and sockets on the coupling.

F04 - Wiring clutch

The electrical wiring is faulty; check the wiring and sockets for breakages.

F05 - Short FEED FWD

If this error message is shown on the display, there is a short circuit to the electrical wiring and/or output sockets. Check the wiring and the sockets that run from the supply button to the dashboard.

F06 - Wiring FEED FWD

If this error message is shown on the display, there is a wiring breakage to the electrical wiring and/or supply sockets. Check the wiring and the sockets that run from the supply button to the dashboard.

F07 - Short FEED REV

If this error message is shown on the display, there is a short circuit to the electrical wiring and/or output sockets. Check the wiring and the sockets that run from the output button to the dashboard.

F08 - Wiring FEED REV

If this error message is shown on the display, there is a wiring breakage to the electrical wiring and/or supply sockets. Check the wiring and the sockets that run from the output button to the dashboard.

F09 - Short THROTTLE

This error message indicates that there is a short circuit on the electrical wiring from the thrust lever. Check the wiring and sockets to the thrust lever.

F10 - Wiring THROTTLE

This error message indicates that there is a wiring breakage on the electrical wiring from the thrust lever. Check the wiring and sockets to the thrust lever.

14.4.2 Dashboard warnings

W00 - Wiring THROTTLE

The safety-stop-bracket is pushed in. Pull this back out order to activate the blade axle.

W01: AntiBlock Motor

When activating the motor's ABM system, this warning will appear on the dashboard

W02 - Speed Up Engine

The revolutions of the motor are insufficient for chipping. Set the machine to run at full gas for chipping.

W03: Activate Blades

W04: Load too high

If the rotor blocks, the electrical coupling will disengage and the feed roller will turn backwards in order to push out wood from the blade axle. Check the blade axle for blockages before opening the shredder chamber. ("Read §11.4.5 Opening the shredding chamber" on page 68")

W05: Start failed

If starting takes too long, the starter motor will automatically be interrupted. First check the fuel level and check "Read §10.1 Preliminary checks" on page 33" to ensure that all of the points have been fulfilled in order to start the machine.

After carrying out the necessary repair to resolve the fault, the Reset button in the troubleshooting menu can be pushed in order to remove the error message.

15. Hazard analysis

Below you will find a list of dangers and risks that are linked to storing away, transporting or using the chipper. Take note of these dangers and avoid these risks by following the instructions contained in this manual. Be aware that it is not just the user who runs a risk but also third parties can be exposed to these risks. Ensure that bystanders are always kept at a safe distance.

- Risk of being crushed by the machine when moving the trailer in an incorrect manner
- Injury to hands due to reaching into the infeed opening past the anti-projection flaps.
- Injury due to the projection of chippings through the feed-in opening
- Danger of suffering heavy injuries or death because a machine part (blades, bolts, etc.) have become loose because there has been a lack of checking and maintenance.
- Danger of suffering injuries due to projection along the feed and discharge sides after a foreign object has been introduced (stone, metal, textile, PVC, etc.).
- Injuries caused by chippings flying out from the discharge opening when the machine is in operation.
- Injuries or cuts on hands when opening the chipping chamber.
- Cutting injuries to hands due to injury from the blade shaft coasting to a stop on opening the chipping chamber.
- Strangulation, mutilation by being withdrawn by flowing garment with the imported wood.
- Burns caused by opening the coolant tank when it is under pressure.
- Burns caused by touching the exhaust or other engine parts when these have not cooled off yet.
- Danger of suffering burns due to chippings and wood residue that is blocking the cooling air ducts.
- Irritation of the airways or lung problems due to inhaling the dust produced.
- Hearing disorder due to insufficient protection of the ears during the work.
- Bruising or injury when feeding materials, due to the power of the blades on the wood.
- Bruising or injury due to the kick-back of wood when being introduced in the feeding hopper.
- Mental disturbance or rheumatic disorder due to shredding for a long time at a time without taking breaks.
- Joint pain due to vibration transfer when continuously inserting thick branches.
- Injuries following contact with the blades for blockage clearance, maintenance or cleaning the machine.
- Danger due to bruising or injury when the out blow chute falls shut when injudiciously folding it.

This is not a comprehensive list and is provided for information purposes only to safeguard the safety of the user.

16. Warranty-conditions

Dear Customer,

Thank you for placing your confidence in ELIET. We are convinced that the appliance you have chosen will fulfil your needs and expectations over the coming years. ELIET is committed to guaranteeing the good performance of its products.

What is warranty ?

ELIET's product design and manufacture procedures are subject to strict quality guidelines, aimed at guaranteeing a long product life and permanent safety. To ensure this, ELIET will repair any hidden defects or abnormalities throughout the warranty period, provided you use your machine as instructed.

Warranty conditions

ELIET's warranty obligations for new machines is governed by the following conditions.

I. Warranty period

The warranty period starts the day the dealer delivers the machine to the customer (date of invoice) and expires

- After two years of private use.
- After twelve months or 100 running hours* of rental use.
- After twelve months or 100 running hours* in semi-professional or in professional use.

To be eligible to obtain warranty the customer is invited to register the newly purchased machine with ELIET. You should complete the registration online on Eliet's webiste : www.eliet.eu

* what is reached first

II. Non-applicability of the warranty

- Wearing parts like knives, bearings, belts, chains, cogwheels, tires, lamps, fuses, etc. are not covered by the warranty.
- When the defect is shown to be caused by improper handling, improper use, negligence or consequential damage that occurs as a result of external influences (fall, broken stones, foreign object, accident).
- When the defect is shown to be caused by a lack of periodic maintenance or cleaning of reinigen van de machine in accordance with the prescribed periodic maintenance.
- If it turns out that the defect was caused by acting against the instructions or advice of the user manual in.
- When the defect occurs after a repair by an unofficial ELIET dealer or a repair using parts that are not original ELIET parts.
- When the defect is shown to be due to the unauthorized modification of the machine's original construction.
- When the defect occurs after use of the machine contravening the instructions for use in the manual.
- When the warranty procedure is not followed or after the end of the warranty term.
- For all problems relating to the motor, please contact an authorized service centre of the engine manufacturer.

III. Procedure

- Step 1: On the date of purchase, the customer should register his/her purchase online by completing the registration card at www.eliet.eu.
- Step 2: In the event of a defect becoming apparent, the customer shall have this verified by the authorized ELIET dealer. If the dealer feels that there is a factory defect, the dealer may invoke the warranty, under the terms specified.
- Step 3: Every warranty application must be accompanied by a fully completed official application form. Copies of this warranty application are available to dealers at ELIET or even at an importer/agent.
- Step 4: The dealer then orders the parts needed to perform the repairs. Next, the dealer faxes the order form together with the completed warranty form.
- Step 5: The warranty form should be stapled to the purchase invoice and mailed to ELIET or an importer/agent of ELIET.
- Step 6: ELIET will send the parts ordered to the dealer under the regular delivery and payment conditions.
- Step 7: The defective part will be examined by the technical department first prior to approving or rejecting the warranty. ELIET reserve the right to solely decide whether or not the customer has complied with the conditions for the validity of this warranty, i.e. 1 year or 2 years. Faulty components shall become the property of ELIET.
- Step 8: When a warranty claim is found to be valid, ELIET will credit the warranty parts. Customers shall never be entitled to apply for a refund of labour costs.

IV. In case of damage caused by transport

- All goods are supplied ex factory. Transport risks are borne by the customer. It follows, that ELIET highly recommend to check the goods for damage on arrival.
- Any damage found should be stated on the delivery form before signing. Make sure the driver of the haulage company puts his signature next to the damage on your copy.
- In the absence of a written and signed declaration on the delivery form, the insurance of the haulage company will not accept any liability.
- Damages can be claimed from the hauler using a copy of the delivery form and a covering letter stating your complaint.
- The damaged machine should be kept in its original condition until the hauler's insurer has performed any examination.

17. EC Declaration of Conformity



Machine : Wood chipper
Model : ELIET MEGA PROF
Type: MA 018 011 340 / MA 018 011 137

The previously mentioned machine has been designed and manufactured to comply with the following European CE regulations :

EN 13525: "Forestry machinery : wood chippers - safety"

ELIET mfg. cy. hereby declares that after performing a hazard analysis, it is fully aware of the potential hazards and risks associated with the machine. In this knowledge, the necessary steps have been taken in line with Machine Directive 2006/42/EC in order to ensure absolute operator safety for the operator, when the machine is used correctly.

The value of the measured sound power level and the guaranteed sound power level were obtained according the procedures set forward in the directive 2000/14/EG annex III/B clause 50 and directive EN 13525..

Measured sound power level LwA : 114 dB(A)
Guaranteed A-weighted sound power level : 115 dB(A)

Date: 01/06/24
Signature:



Frederic LIETAER
CEO ELIET EUROPE NV

ELIET EUROPE NV
Diesveldstraat 2
B - 8553 Otegem
Belgium
Tel : +32 56 77 70 88
Fax :+32 56 77 52 13
E-mail : info@eliet.be

English

